Onan

Parts Manual

MDL4

Marine GenSet

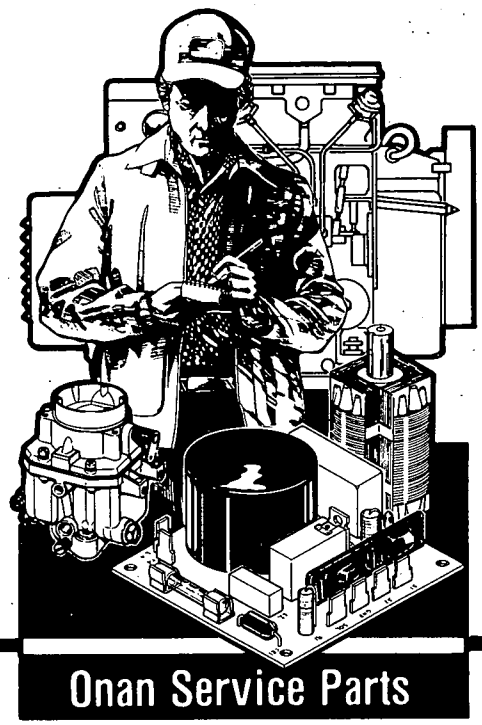

934-0227
6-89 (Spec A and B)
Replaces 1-86 (Spec A and B)
Printed in U.S.A.

Index

Actuator, Governor 11
Adapter, Generator 23
Adapter, Oil Filter 14
Adapter, Water Pump 6
Arm, Governor 11

Belt, Coolant Pump 21
Block, Cylinder 4
Breaker, Circuit - Electronic Governor 11

Cable, Magnetic Pickup 11
Camshaft 4
Cap, Oil Fill 17
Cap, Pressure 18
Clamp, Wiring Harness 42
Connector, Coolant Outlet 20
Control 40-43
Control, Governor 11
Cover, Rocker 17
Crankshaft 4
Cushion, Engine Mounting 31

Drain, Oil - Spec A 15

Elbow, Exhaust 20

Filter, Fuel 12
Filter, Oil 14
Flywheel 24

Gauge, Oil Pressure - Mechanical 35
Gear, Camshaft 4
Gear, Crankshaft 4
Gear, Injection Pump 8
Gearcase 8
Generator 38
Governor, Electronic 11
Guard, Belt 30
Guard, Generator Fan 38

Harness, Wiring - Electronic Governor 11
Harness, Wiring - Generator Set 42
Harness, Wiring - Generator Set to Remote Control 47
Head, Cylinder 6
Hose, Overflow 18
Housing, Sound Shield 32

Indicator, Oil Level 13
Indicator, Timing 23
Injector, Fuel 9

Kit, DC Gauge - Generator Set Control - Field Installation 48
Kit, Electronic Governor - Field Installation 11
Kit, Gasket - Lower End 4
Kit, Gasket - Lower End - Components 48
Kit, Gasket - Valve Grind 6
Kit, Gasket - Valve Grind - Components 48
Kit, Housing - Sound Shield 32
Kit, Muffler 34
Kit, Panel - Deluxe Remote Control 45
Kit, Panel - Remote Control DC Gauge 46
Kit, Panel - Standard Remote Control 44
Kit, Repair - Coolant Pump 21
Kit, Repair - Fuel Transfer Pump 12
Kit, Service - Raw Water Pump 22
Kit, Siphon Break 34

Line, Fuel Injection 9
Line, Oil Drain - Spec A 15

Manifold, Exhaust 18
Manifold, Intake 17
Mount, Engine - Front 28
Muffler 34

Paint - Touch Up 48
Pan, Drip 31
Pan, Oil 13
Panel, Remote Control - DC Gauge 46
Panel, Remote Control - Deluxe 45
Panel, Remote Control - Standard 44
Pencil, Zinc 18
Pickup, Oil 13
Piston 4
Plate, Timing 8
Plug, Glow 28
Potentiometer - Electronic Governor 11
Pulley, Coolant Pump 21
Pulley, Crankshaft 21
Pulley, Raw Water Pump 22
Pump, Coolant 21
Pump, Fuel Transfer 12
Pump, Injection 9
Pump, Oil 8
Pump, Raw Water 22
Pump Components, Injection 10

Relay, Electronic Governor 11
Resistor, Ballast - Glow Plugs 37
Rod, Connecting 4
Rod, Governor Control 11

Sealant, Thread 48
Sender, Low Coolant Level 21
Sender, Oil Pressure 35
Sender, Water Temperature 21
Sensor, Magnetic Speed 11
Silencer, Air 29
Starter 25
Starter Components - Mitsubishi 26
Starter Components - Prestolite 27
Strap, Ground - Engine 31
Switch, High Exhaust Temperature 20
Switch, Oil Pressure 35
Switch, Overspeed 38
Switch, Thermostat 21

Tappet 4
Thermostat 21
Tube, Breather 6
Tube, Nozzle Leak Off 12
Tube, Oil Fill 17

Valve, Coolant Drain 4
Valve, Oil Drain 13

Introduction

This manual applies to the standard generator sets as listed below. Parts are arranged in groups of related items and each illustrated part is identified by a reference number corresponding to the same reference number in the parts list. Unless otherwise mentioned in the description, parts are interchangeable between models. All references in the parts description that pertain to specification letter differences for replacement parts are for the model listed on the identification label affixed to the generator set control as illustrated on page 3. Throughout this manual left (non-accessory) and right (accessory) sides are determind by facing the rear or generator end of the set.

Generator Set Data Table

MODEL IDENTIFICATION	RATING	MODEL IDENTIFICATION	RATING
16.0 MDL4-**/*	16,000 WATTS	20.0 MDL4-**/*	20,000 WATTS

Electrical Data Table

**VOLTAGE CODES	VOLTS	HERTZ	WIRE	PHASE	NOTES
J (3C)	120, 240, 120/240	60	4	1	+
G (4XR)	277/480	60	12	3	
P (53C)	110/220, 115/230, 120/240	50	4	1	+
Z (518R)	110, 115, 220, 110/220, 115/230, 120/240	50	12	1	+
L (18R)	120/208, 120/240, 127/220, 139/240, 240/416, 254/440, 277/480	60	12	3	+
Z (518R)	110/190, 110/220, 115/200, 115/230, 120/208, 120/240, 127/220, 220/380, 230/400, 240/416, 254/440	50	12	3	+

* - The diagonal line (/) in the model and specification number separates generator set characteristics from the specification number and letter. The specification number denotes customer requested options or deviations from a standard (1A, 1B, etc.) model. The specification letter advances (A to B, B to C, etc.) with major manufacturing changes.

** - A letter is now used in the model to indicate the voltage codes and replaces the corresponding number and letter designations (in brackets) as listed in the Electrical Data Table column. (Example: 20.0 MDL4-L/ was formerly 20.0 MDL4-18R/) The letter designation change occurred during the later portion of Spec B.

\+ - These generators have four load wires which are reconnectible for 120 volt, 2 wire service or 240 volt, 2 wire service or 120/240 volt, 3 wire service.

Model Identification Label

Onan GenSet

Model No.					
Serial No.					
Important - Give above no.'s when ordering parts					
Service Rating:					
Hertz:		RPM:			
Single Phase	kW	KVA			
Three Phase	kW	KVA			
Volts:	110/190	110/220	115/200	115/230	120/208
Amps:					
120/240	127/220	139/240	220/380	230/400	240/416
240/480	254/440	277/480	347/600	115/230 1Ø	120/240 1Ø
For Elec Eqpt Only		PF:	Bat.:		

Insul - NEMA Class 40°C

Onan Corporation Minneapolis Mn 55432 USA

Made in USA 99-1992

For handy reference, insert your generator control nameplate information in the spaces above.

Cylinder Block

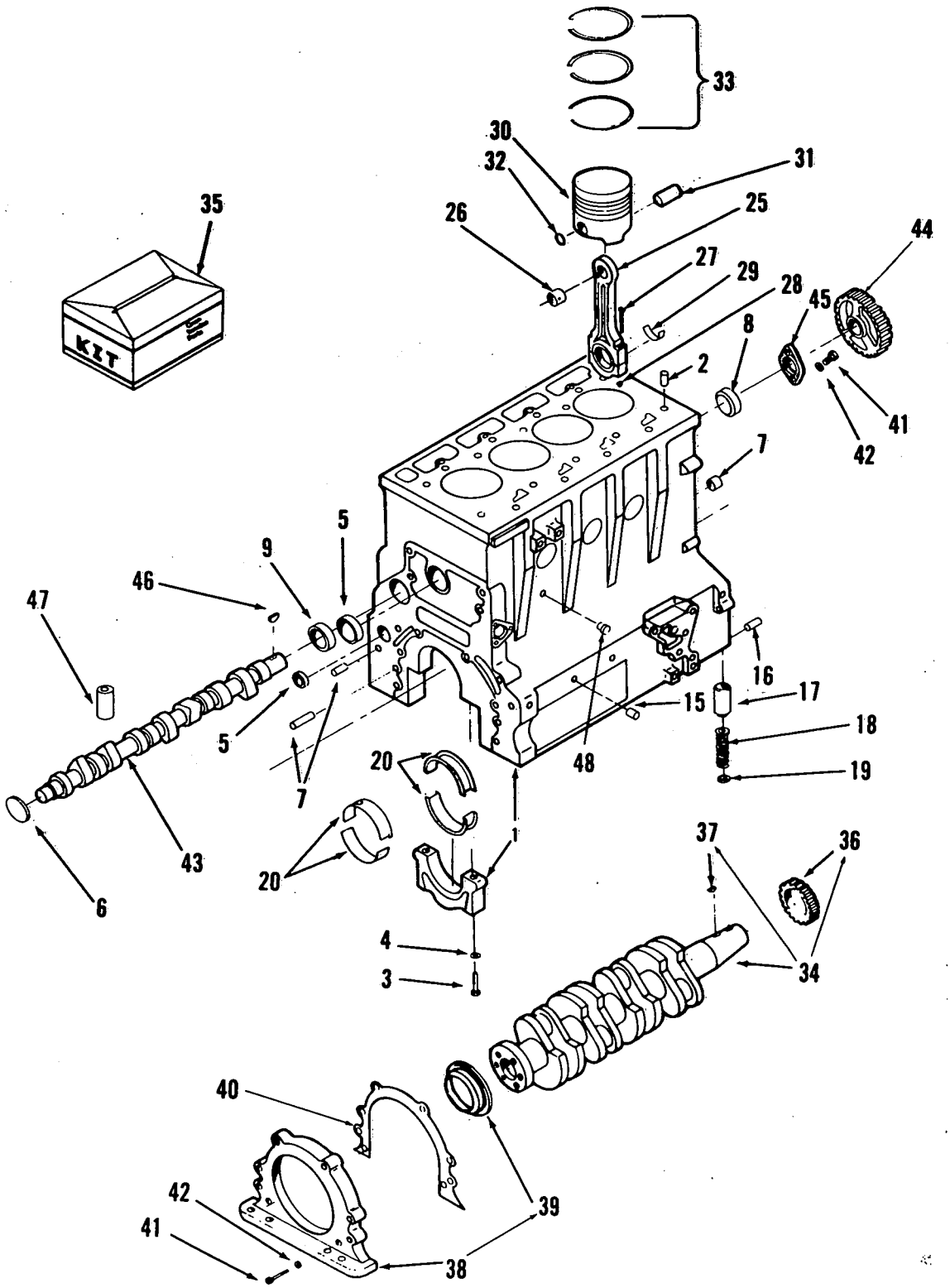

Cylinder Block

REF NO.	PART NO.	QTY USED	PART DESCRIPTION
1	110-3290	1	Block Assembly, Cylinder (Includes Parts Marked *)
2	110-2978	2	*Pin, Cylinder Head Alignment
3	720-1801	10	*Screw, Cap - Hex Head - Special
4	740-1801	10	*Washer, Flat - Special
5			Plug, Cup
	517-0141	4	* 50.8mm Stainless Steel
	517-0144	2	* 12.7mm Steel
	517-0146	1	* 31.75mm Stainless Steel
	517-0250	1	54.37mm Stainless Steel (Oversize)
6	517-0140	1	*Plug, Welch (57.15mm) - Steel
7			Pin, Alignment
	775-0074	2	* 8mm x 20mm
	775-0089	2	* 10mm x 20mm
	775-0078	2	* 8mm x 40mm
8	101-0511	1	*Bearing, Camshaft - Front
9	101-0471	4	*Bearing, Camshaft - Intermediate and Rear
15			Plug, Pipe
	502-0153	1	* Brass (1/4")
	502-0274	4	* Steel (1/8")
16	516-2102	1	*Pin, Regulator Valve Spring
17	123-1514	1	*Piston, Regulator Valve
18	123-1511	1	*Spring, Regulator Valve
19	740-1004	1	*Washer, Flat (M6)
20			Kit, Bearing - Main (Includes Upper and Lower Bearing Half)
			Front
	101-0689	1	Standard
	101-0690	1	0.25mm Undersize
	101-0691	1	0.50mm Undersize
	101-0692	1	0.75mm Undersize
			Center
	101-0681	1	Standard
	101-0682	1	0.25mm Undersize
	101-0683	1	0.50mm Undersize
	101-0684	1	0.75mm Undersize
			Intermediate (Except Center)
	101-0685	2	Standard
	101-0686	2	0.25mm Undersize
	101-0687	2	0.50mm Undersize
	101-0688	2	0.75mm Undersize
			Rear
	101-0677	1	Standard
	101-0678	1	0.25mm Undersize
	101-0679	1	0.50mm Undersize
	101-0680	1	0.75mm Undersize

REF NO.	PART NO.	QTY USED	PART DESCRIPTION
25	114-0313	4	Rod Assembly, Connecting (Includes Finished Bushing, Bolts and Nuts)
26	114-0316	4	Bushing, Connecting Rod (Semifinished)
27	114-0315	8	Bolt, Connecting Rod
28	114-0318	8	Nut, Connecting Rod
29			Bearing, Connecting Rod (Half)
	114-0319	8	Standard
	114-0319-01	8	0.25mm Undersize
	114-0319-02	8	0.50mm Undersize
	114-0319-03	8	0.75mm Undersize
30			Kit, Piston and Pin (Includes Retaining Rings)
	112-0201	4	Standard
	112-0202	4	0.25mm Oversize
	112-0203	4	0.50mm Oversize
	112-0204	4	0.75mm Oversize
	112-0205	4	1.0mm Oversize
31	112-0165	4	Pin, Piston
32	518-0409	8	Ring, Retaining - Piston Pin
33			Ring Kit, Piston
	113-0233	4	Standard
	113-0234	4	0.25mm Oversize
	113-0235	4	0.50mm Oversize
	113-0236	4	0.75mm Oversize
	113-0237	4	1.0mm Oversize
34	104-1508	1	Crankshaft Assembly (Includes Gear and Key)
35	168-0170	1	Kit, Gasket - Lower End (See Separate Page for Components)
36	104-1138	1	Gear, Crankshaft
37	515-0245	1	Key - Crankshaft Gear
38	101-0713	1	Plate, Rear Seal (Includes Seal)
39	509-0203	1	Seal, Oil - Rear (Includes Wear Sleeve)
40	101-0600	1	Gasket, Rear Seal Plate
41	718-1037	8	Screw, Cap - Hex Head (M8 x 25mm)
42	740-1006	8	Washer, Flat (M8)
43	105-0517	1	Camshaft
44	105-0515	1	Gear, Camshaft
45	105-0534	1	Retainer, Camshaft
46	515-0245	1	Key, Camshaft Gear
47	115-0275	8	Tappet
48	504-0028	1	Valve, Coolant Drain

* - Parts Included in 110-3290 Cylinder Block Assembly.

Cylinder Head

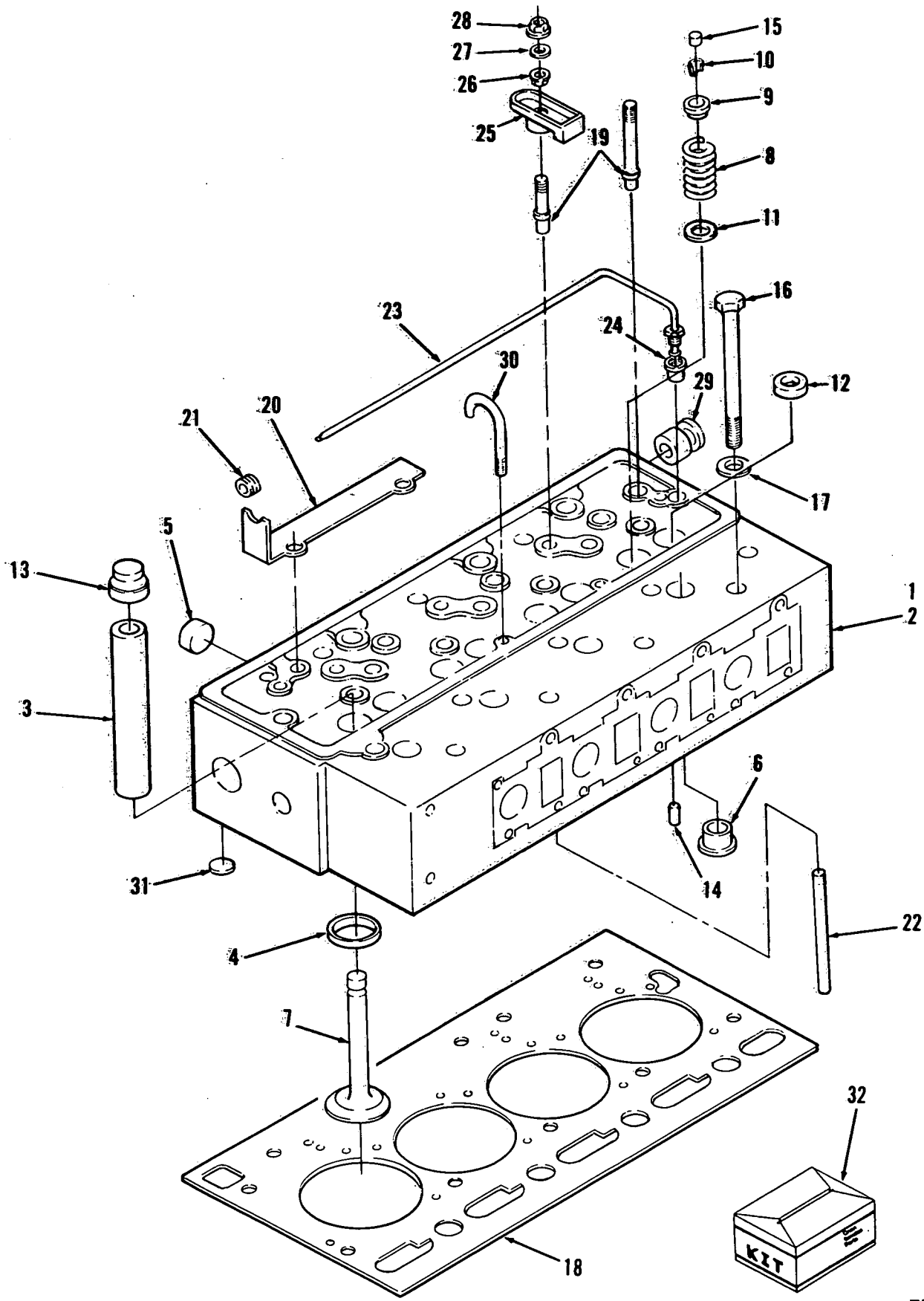

771A

Cylinder Head

REF NO.	PART NO.	QTY USED	PART DESCRIPTION
1	110-3201	1	Head Assembly, Cylinder (Includes Guides, Seats, Valves, Cup Plugs, Springs, Breather Tubes, Retainers, Water Pump Adapter, Collets, Wear Plates, Sleeves, Spacers and Seals)
2	110-3285	1	Head Assembly, Cylinder (Includes Water Pump Adapter, Seats, Guides, Cup Plugs, Spacers and Sleeves)
3			Guide, Valve (Semifinished)
	110-3495	4	Intake (Standard)
	110-3496	4	Exhaust (Standard)
4			Seat, Valve
			Intake (Not Original Equipment)
	110-2839	4	Spec A (Standard)
			Begin Spec B
	110-3226-01	4	Standard
	110-3226-02	4	0.25mm Oversize
	110-3226-03	4	0.50mm Oversize
			Exhaust
	110-2781-01	4	Standard
	110-2781-02	4	0.25mm Oversize
	110-2781-03	4	0.50mm Oversize
5			Plug, Cup
	517-0142	7	38.1mm
	517-0146	4	31.75mm
	517-0162	4	19.05mm
6	110-3137	4	Plug, Hot (Swirl)
7			Valve
	110-3066	4	Intake
	110-2840	4	Exhaust
8	110-3300	8	Spring, Valve
9	110-3015	8	Retainer, Valve Spring
10	110-2752	16	Collet, Valve Lock
11			Plate, Valve Spring Wear
	110-2991	8	Spec A
	110-2991	4	Begin Spec B (Exhaust)
12	110-3432	4	Spacer, Valve Spring (Intake) Begin Spec B
13	110-3228	8	Seal Assembly, Valve Stem
14	110-2979	4	Sleeve, Sealing
15	110-3245	8	Cap, Valve Stem (Not used on some early models)
16	720-1802	18	Screw, Cap - Hex Head (M12 x 130mm)
17	740-1801	14	Washer, Flat (M12)
18	110-3012	1	Gasket, Cylinder Head
19			Stud, Rocker Arm
	115-0204	4	Short
	115-0270	4	Long
20	115-0313	2	Guide, Push Rod
21	508-0228	2	Grommet
22	115-0253	8	Pushrod
23	120-0919	1	Tube, Rocker Arm Oil
24	502-0003	1	Connector, Inverted Male
25	115-0316	8	Arm, Rocker
26	115-0202	8	Ball, Rocker Arm
27	526-2119	8	Washer, Flat
28	115-0315	8	Locknut, Rocker Arm
29			Adapter, Water Pump
	110-3045	1	Standard
	110-3490	1	0.5mm Oversize
30	123-1536	2	Tube, Breather
31	517-0167	1	Plug, Cup (22.6mm)
32	168-0159	1	Kit, Gasket - Valve Grind (See Separate Page for Components)

Gearcase

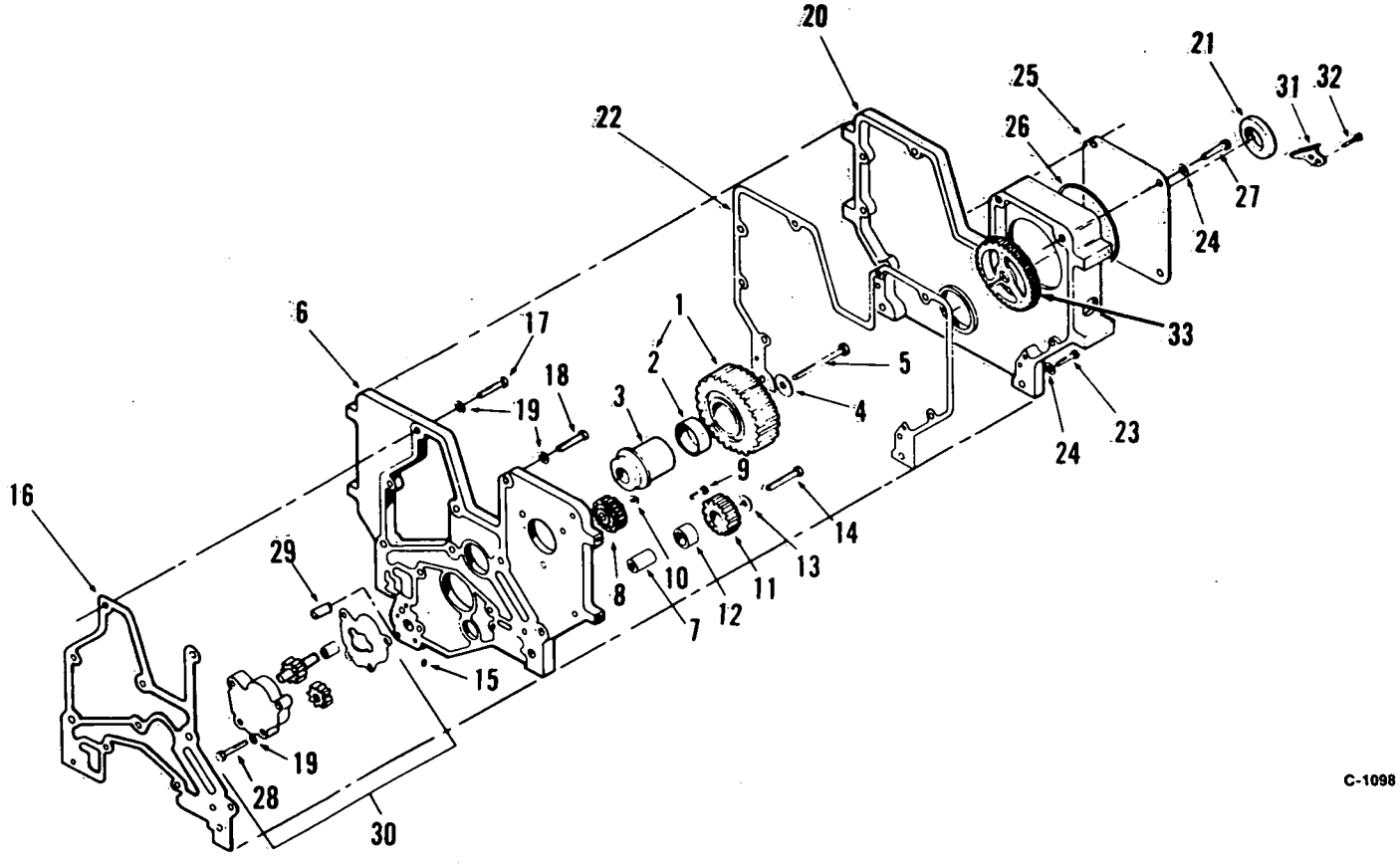

REF NO.	PART NO.	QTY USED	PART DESCRIPTION
1	105-0513	1	Gear, Idler (Includes Finished Bearing)
2	105-0519	1	Bearing, Idler Gear (Semifinished)
3	105-0508	1	Shaft, Idler Gear
4	526-2127	1	Washer, Flat (M10)
5	718-1064	1	Screw, Cap - Hex Head (M10 x 75mm)
6	103-0716	1	Backplate, Gearcase
7	120-0983	1	Shaft, Oil Pump Idler Gear
8	120-0885	1	Gear, Oil Pump Drive
9	718-1035	1	Screw, Cap - Hex Head (M8 x 16mm)
10	526-2106	1	Washer, Flat
11	120-1063	1	Gear, Oil Pump Idler (Includes Finished Bearing)
12	120-1041	1	Bearing, Oil Pump Idler Gear (Semifinished)
13	526-2107	1	Washer, Flat
14	718-1035	1	Screw, Cap - Hex Head (M8 x 16mm)
15	725-1802	1	Screw, Hex Socket Set (M16 x 16mm)
16	103-0733	1	Gasket, Gearcase Backplate
17			Screw, Cap - Hex Head
	718-1037	1	M8 x 25mm
	718-1039	2	M8 x 35mm
18	725-1801	2	Screw, Cap - Low Socket Head (M8 x 16mm)
19	740-1006	7	Washer, Flat (M8)
20	103-0746	1	Gearcase Assembly (Includes Oil Seal and Oil Fill Tube)
21	509-0191	1	Seal, Oil (Includes Wear Sleeve)
22	103-0731	1	Gasket, Gearcase
23			Screw, Cap - Hex Head
	718-1046	2	M8 x 70mm
	718-1043	2	M8 x 55mm
24			Washer, Flat
	740-1006	4	M8
	740-1010	4	M12
25	103-0735	1	Cover, Injection Pump Gear
26	509-0263	1	Seal, O-Ring
27			Screw, Cap - Hex Head
	718-1048	1	M8 x 80mm
	718-1044	2	M8 x 60mm
	718-1036	1	M8 x 20mm
28	718-1041	2	Screw, Cap - Hex Head (M8 x 45mm)
29	120-0979	1	Bearing, Oil Pump Drive Shaft
30	120-1015	1	Kit, Pump - Oil (Includes Drive Shaft Bearing)
31	103-0750	1	Plate, Timing
32	815-0578	2	Screw, Cap - Hex Head (M6 x 12.5mm)
33	147-0427	1	Gear, Injection Pump

Fuel Injection

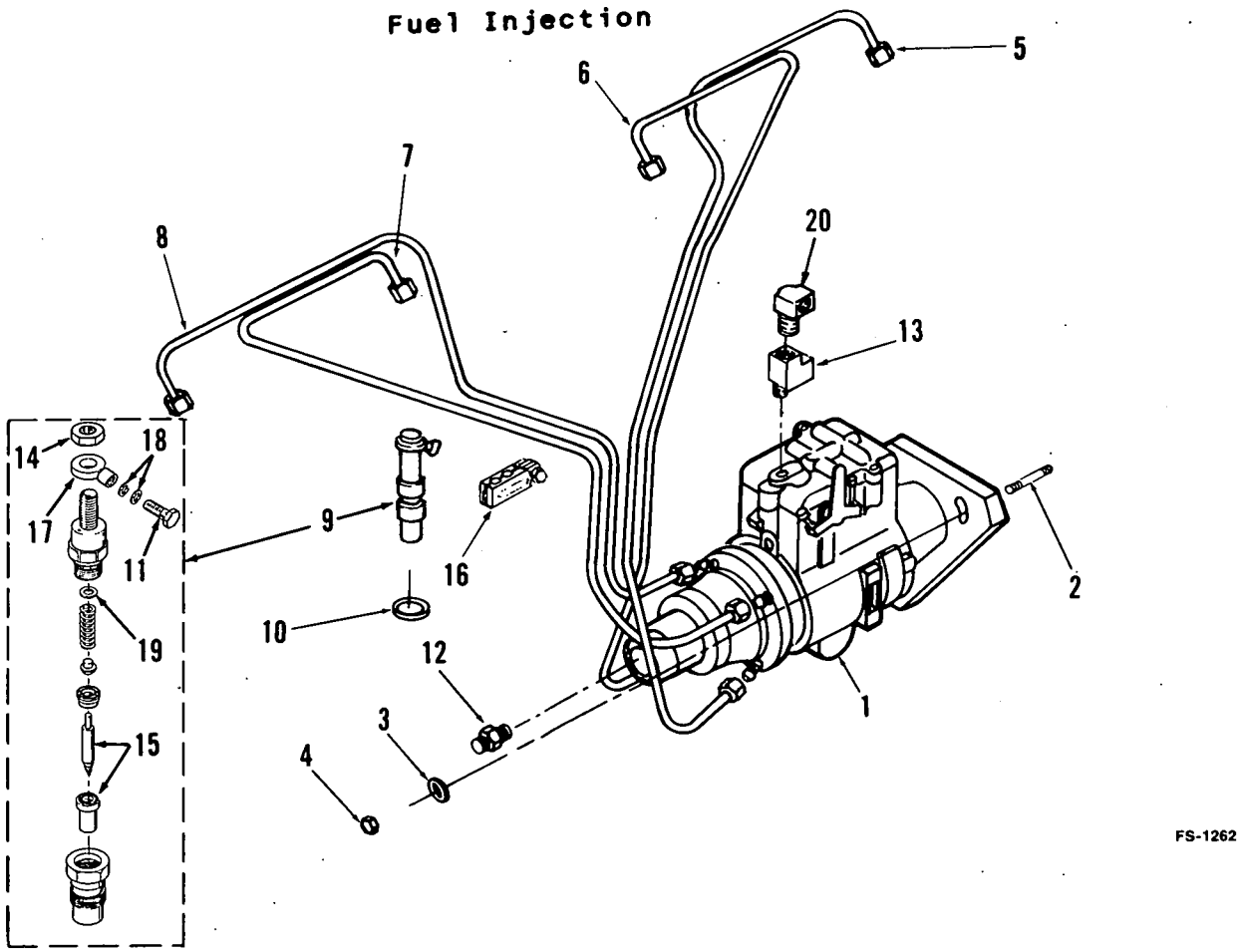

REF NO.	PART NO.	QTY USED	PART DESCRIPTION
1			Pump, Fuel Injection (See Separate Page for Components)
			60 Hertz Sets
	147-0462-05	1	12 Volt DC
	147-0462-09	1	24 Volt DC
	147-0462-10	1	32 Volt DC
			50 Hertz Sets
	147-0462-06	1	12 Volt DC
	147-0462-11	1	24 Volt DC
	147-0462-12	1	32 Volt DC
2	520-2403	3	Stud, Injection Pump (M8)
3	526-2106	3	Washer, Flat (M8)
4	750-1006	3	Nut, Hex (M8)
5	147-0675	1	Line, Injection (No. 1 Cylinder)
6	147-0676	1	Line, Injection (No. 2 Cylinder)
7	147-0677	1	Line, Injection (No. 3 Cylinder)
8	147-0678	1	Line, Injection (No. 4 Cylinder)
9	147-0700	4	Kit, Injector - Fuel (Includes Seal)
10	147-0436	4	Seal, Injector
11	147-0765	4	Screw, Hollow
12	502-0733	1	Connector
13	502-0254	1	Tee, Pipe (Special)
14	147-0780	4	Nut, Hex (M19)
15	147-0647	4	Tip, Nozzle
16			Clamp, Fuel Line
	147-0680	2	Clamps Two Lines
	147-0679	1	Clamps Four Lines
17	147-0766	4	Banjo
18	147-0767	8	Washer

REF NO.	PART NO.	QTY USED	PART DESCRIPTION
19			Washer, Injection Nozzle Shim (Use as required)
	147-0617	1	0.80mm
	147-0618	1	0.84mm
	147-0619	1	0.88mm
	147-0620	1	0.92mm
	147-0621	1	0.96mm
	147-0622	1	1.00mm
	147-0623	1	1.04mm
	147-0624	1	1.08mm
	147-0625	1	1.12mm
	147-0626	1	1.16mm
	147-0627	1	1.20mm
	147-0628	1	1.24mm
	147-0629	1	1.28mm
	147-0630	1	1.32mm
	147-0631	1	1.36mm
	147-0632	1	1.40mm
	147-0633	1	1.44mm
	147-0634	1	1.48mm
	147-0635	1	1.52mm
	147-0636	1	1.56mm
	147-0637	1	1.60mm
	147-0638	1	1.64mm
	147-0639	1	1.68mm
	147-0640	1	1.72mm
	147-0641	1	1.76mm
	147-0642	1	1.80mm
	147-0643	1	1.84mm
	147-0644	1	1.88mm
	147-0645	1	1.92mm
	147-0646	1	1.96mm
20	502-0020	1	Elbow, Street - 90° (1/8") Fuel Injector Return Line

Fuel Injection Pump Components

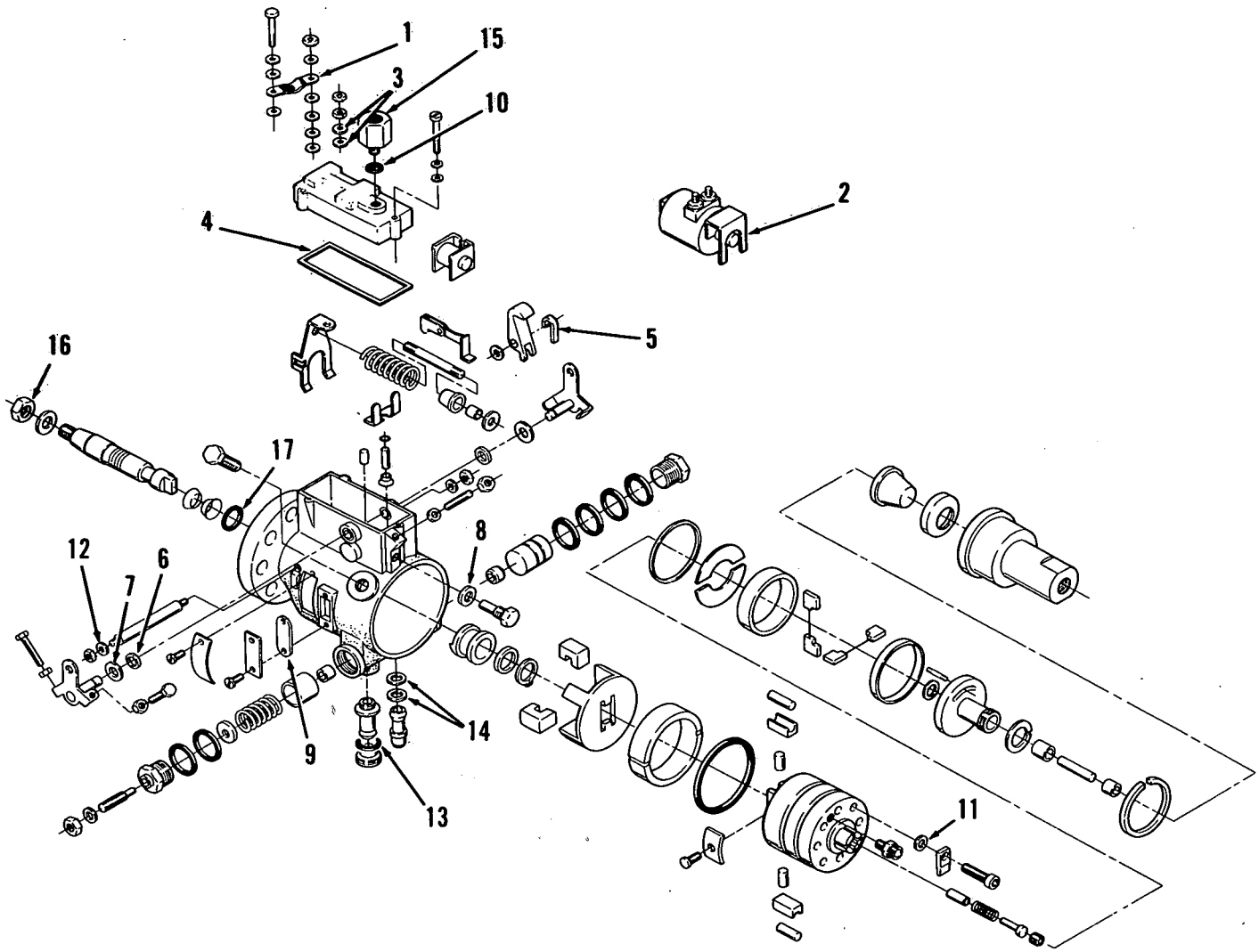

REF NO.	PART NO.	QTY USED	PART DESCRIPTION
			Pump, Fuel Injection - Complete
			60 Hertz Sets
	147-0462-05	1	12 Volt DC
	147-0462-09	1	24 Volt DC
	147-0462-10	1	32 Volt DC
			50 Hertz Sets
	147-0462-06	1	12 Volt DC
	147-0462-11	1	24 Volt DC
	147-0462-12	1	32 Volt DC
1	147-0592	1	Strap, Terminal Grounding
2			Kit, Solenoid and Frame
	147-0593	1	12 Volt DC
	147-0703	1	24 Volt DC
	147-0704	1	32 Volt DC
3	147-0591	2	Washer, Terminal Insulating
4	147-0590	1	Gasket, Governor Cover
5	147-0589	1	Clip, Shaft Retaining
6	147-0588	2	Seal, Throttle Shaft
7	147-0587	2	Washer, Throttle Shaft Seal
8	147-0586	1	Washer, Guide Stud
9	147-0585	1	Gasket, Timing Line Cover
10	147-0584	1	Seal, Return Line Connector
11	147-0583	1	Seal, Locking Plate
12	147-0582	2	Seal, Pivot Shaft
13	147-0581	1	Seal, Advance Screw Hole Plug
14	147-0580	2	Seal, Head Locating Screws
15	147-0579	1	Connector, Return Line
16	147-0578	1	Nut, Drive Shaft
17	509-0265	1	Seal, Pilot Tube

NOTE: For components parts not listed, contact manufacturer shown on nameplate.

Electronic Governor
(With Remote Speed Adjustment - 24 Volt DC)

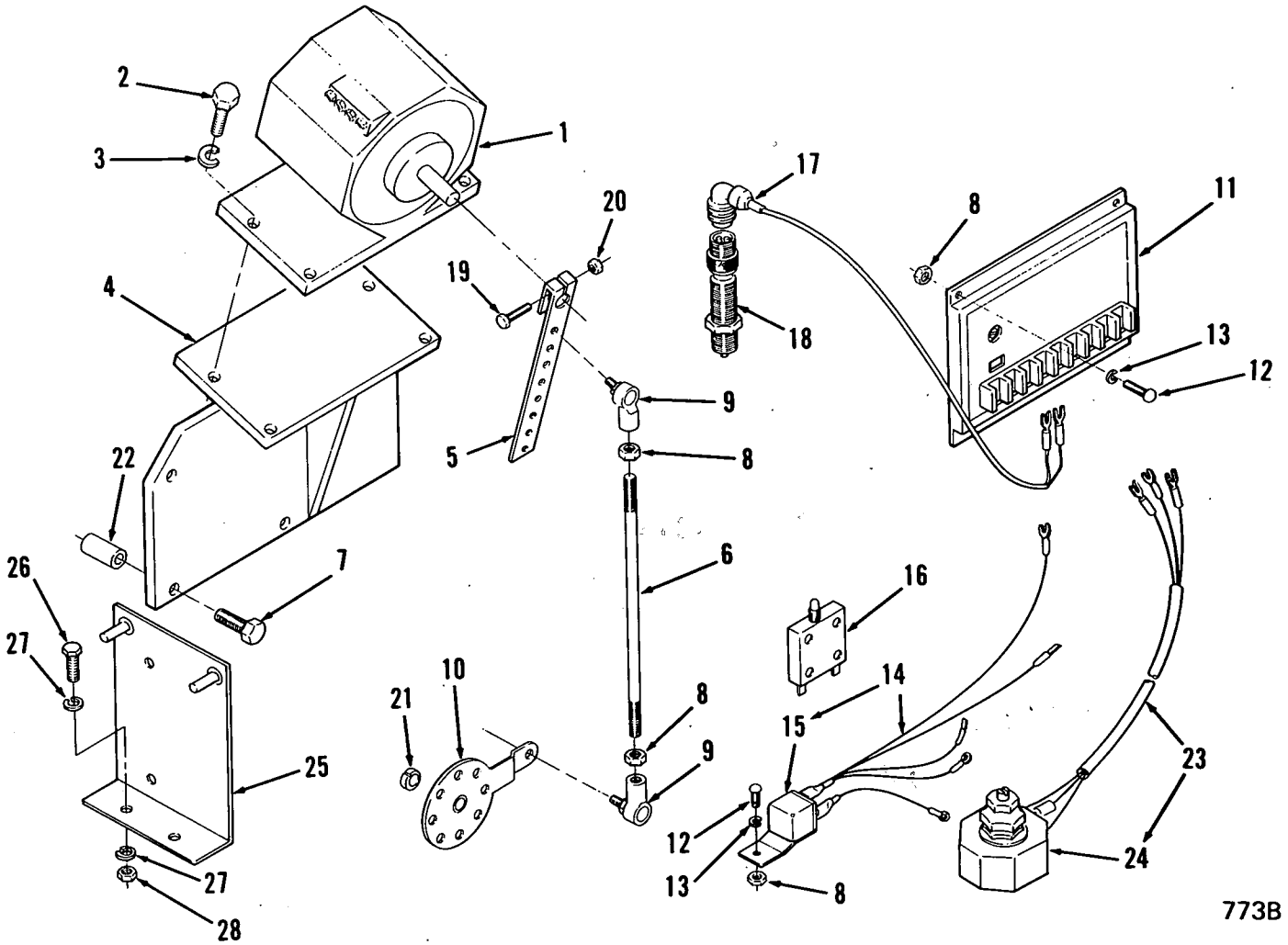

REF NO.	PART NO.	QTY USED	PART DESCRIPTION
	150-2236	1	Kit, Electronic Governor - Field Installation - 24 Volt DC (With Remote Mounted Speed Adjustment) (Includes Parts Marked *)
1	151-0639	1	*Actuator, Governor
2	800-0006	4	*Screw, Cap - Hex Head (1/4-20 x 7/8")
3	850-0040	4	*Washer, Lock - Spring (1/4")
4	150-1996	1	*Bracket, Mounting
5	151-0567	1	*Arm, Governor (Includes Screw and Nut)
6	150-1923	1	*Rod, Governor Control
7	800-2071	4	*Screw, Cap - Hex Head (M8 x 90mm)
8	870-0131	7	*Nut, Hex - with ET (#10-32)
9	150-0939	2	*Joint, Ball
10	151-0437	1	*Kit, Throttle Modification (Fuel Injection Pump)
11	151-0638	1	*Control, Governor (24 Volt DC) (Includes Jumper) (A12)
12	813-0103	5	*Screw, Machine - Round Head (#10-32 x 3/4")
13	850-0030	5	*Washer, Lock - Spring (#10)
14	338-2292	1	*Harness, Wiring - Includes Relay
15	307-2643	1	*Relay (24 Volt DC)
16	320-0540	1	*Breaker, Circuit - 15 Amp (Includes Mounting Nuts) (CB13)
17	338-1765-01	1	*Cable, Magnetic Pickup (60")
18	151-0603-02	1	*Sensor, Magnetic Speed
19	800-0007	1	*Screw, Cap - Hex Head (1/4-20 x 1")
20	870-0065	1	*Nut, Self-Locking (1/4-20)
21	147-0779	1	*Sleeve, Throttle Stop
22	130-1107	2	Spacer
23	150-2239	1	*Potentiometer Assembly - 24 Volt DC (Remote Mounted) (Includes Resistor, Terminals and Shielded Cable)
24	151-0402	1	*Potentiometer, Speed (Includes Resistor)
25	150-2281	1	*Bracket, Resistor
26	718-1007	2	*Screw, Cap - Hex Head (M6 x 20mm)
27	850-2006	4	*Washer, Lock - Spring (M6)
28	750-1004	2	*Nut, Hex (M6)

* - Parts Included in 150-2236 Electronic Governor Kit.

Fuel System

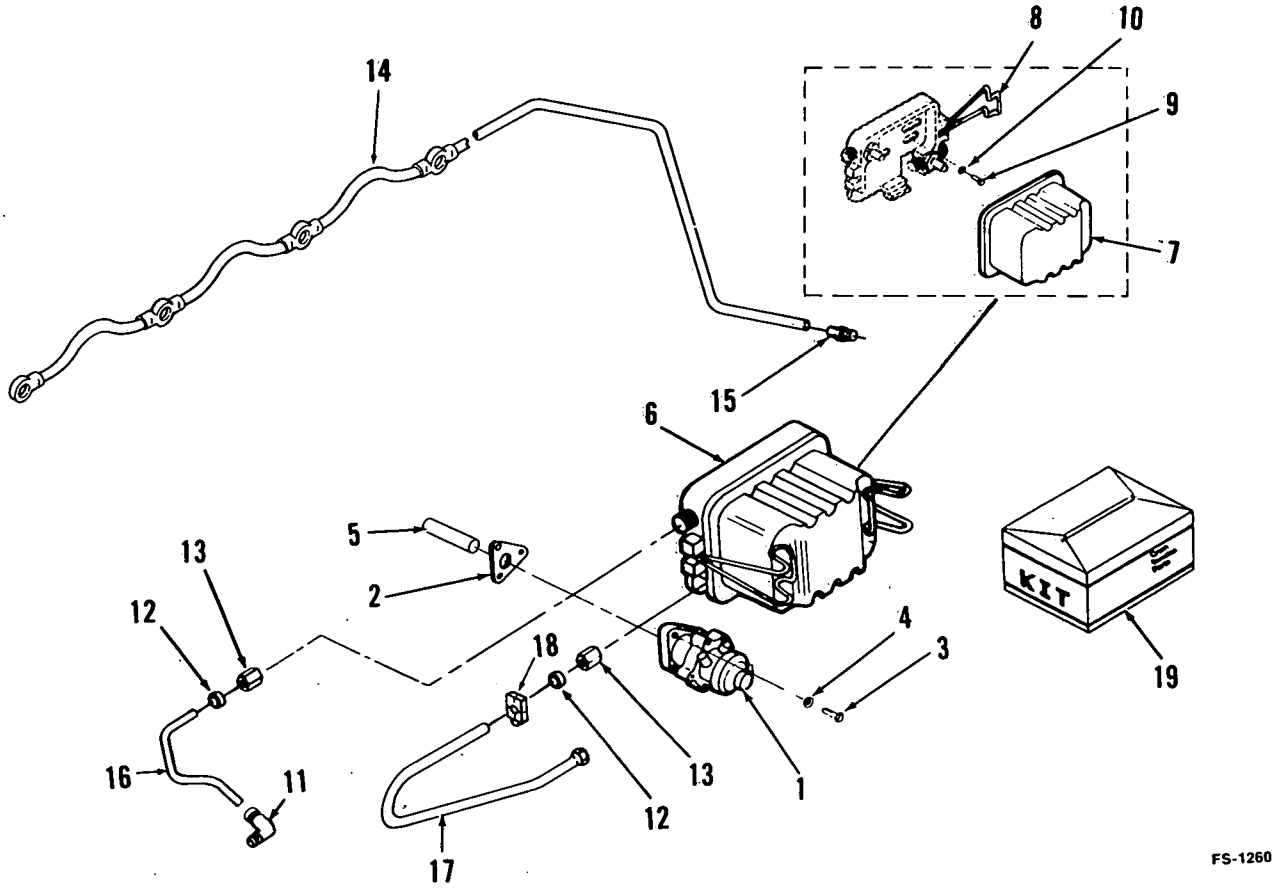

REF NO.	PART NO.	QTY USED	PART DESCRIPTION
1	149-2067	1	Kit, Pump - Fuel Transfer (Includes Mounting Gasket)
2	149-1728	1	Gasket, Fuel Transfer Pump
3	718-1021	3	Screw, Cap - Hex Head (M6 x 20mm)
4	740-1004	3	Washer, Flat (M6)
5	149-1732	1	Pushrod, Fuel Transfer Pump
6	149-1759	1	Filter Assembly (Includes Filter, Base, Clips and Grommet)
7	149-1758	1	Filter, Fuel
8	149-1771	2	Clip, Fuel Filter
9	725-1074	2	Screw, Cap - Socket Head (M10 x 20mm)
10	740-1008	2	Washer, Flat (M10)
11	502-0774	1	Elbow, Fuel Pump Outlet (Includes Sleeve and Nut)
12	502-0768	2	Sleeve, Flareless Line
13	502-0769	2	Nut, Flareless Line
14	147-0664	1	Tube, Nozzle Leak Off
15	502-0773	1	Connector, Male (Includes Sleeve and Nut)
16	149-1772	1	Line, Fuel
17	149-1793	1	Line, Fuel
18	149-1800	1	Grommet, Fuel Line
19	149-1834	1	Repair Package - Transfer Pump

Oil Pan

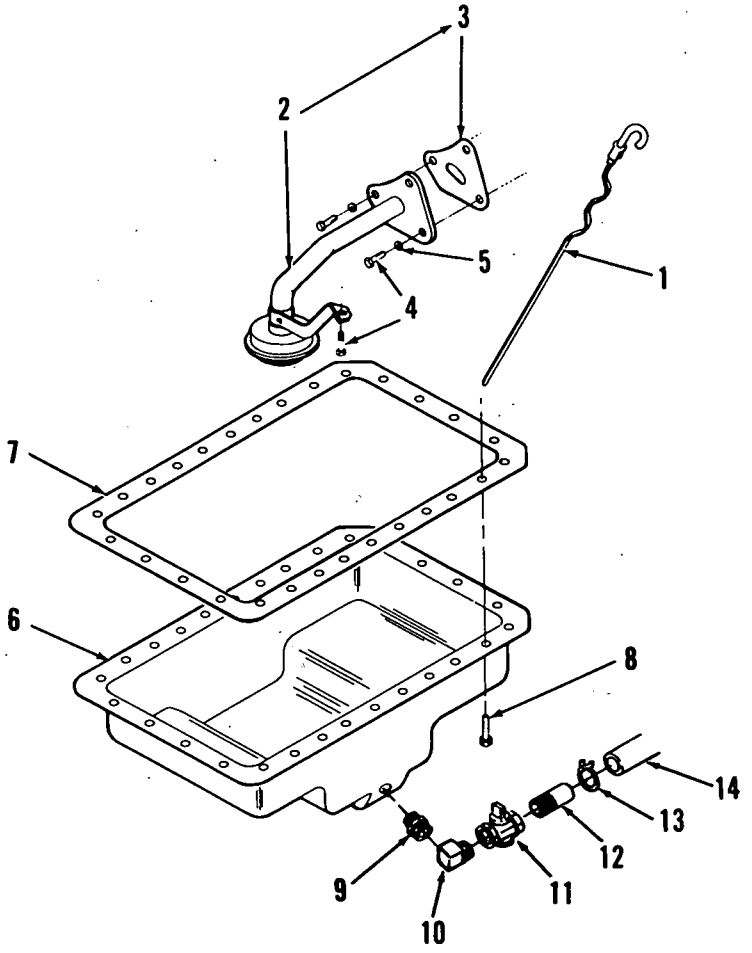

REF NO.	PART NO.	QTY USED	PART DESCRIPTION
1	123-1439	1	Indicator, Oil Level
2	120-1008	1	Kit, Oil Pickup (Includes Mounting Gasket)
3	120-0917	1	Gasket, Oil Pickup
4			Screw, Cap - Hex Head
	718-1044	2	M8 x 60mm
	718-1036	2	M8 x 20mm
5	740-1006	4	Washer, Flat (M8)
6	102-1188	1	Kit, Oil Pan (Includes Oil Drain Gasket and Adapter)
7	102-0981	1	Gasket, Oil Pan
8	815-0547	28	Screw, Cap - Hex Head (Includes Washer) M8 x 20mm
9	102-1237	1	*Adapter, Oil Drain
10	505-0050	1	*Elbow, Street - 90° (1/2")
11	504-0011	1	*Valve, Shutoff
12	505-0185	1	*Nipple, Half (1/2")
13	503-0197	1	*Clamp, Hose
14	503-1195	1	*Hose, Oil Drain (3/4")

* - Begin Spec B

Oil Filter

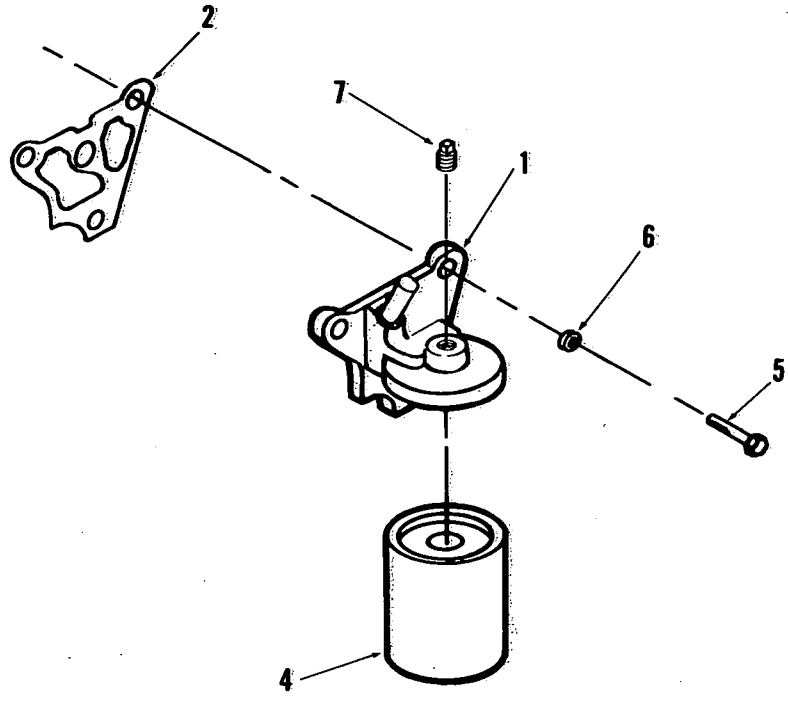

LS-1057

REF NO.	PART NO.	QTY USED	PART DESCRIPTION
1	122-0592	1	Adapter, Oil Filter
2	122-0635	1	Gasket, Oil Filter Adapter
4	122-0550	1	Filter, Oil
5	725-1051	3	Screw, Cap - Socket Head (M8 x 25mm)
6	526-2108	3	Washer, Flat (M8)
7	505-0274	1	Plug, Pipe - Hex Head (1/8")

Oil Drain - Spec A

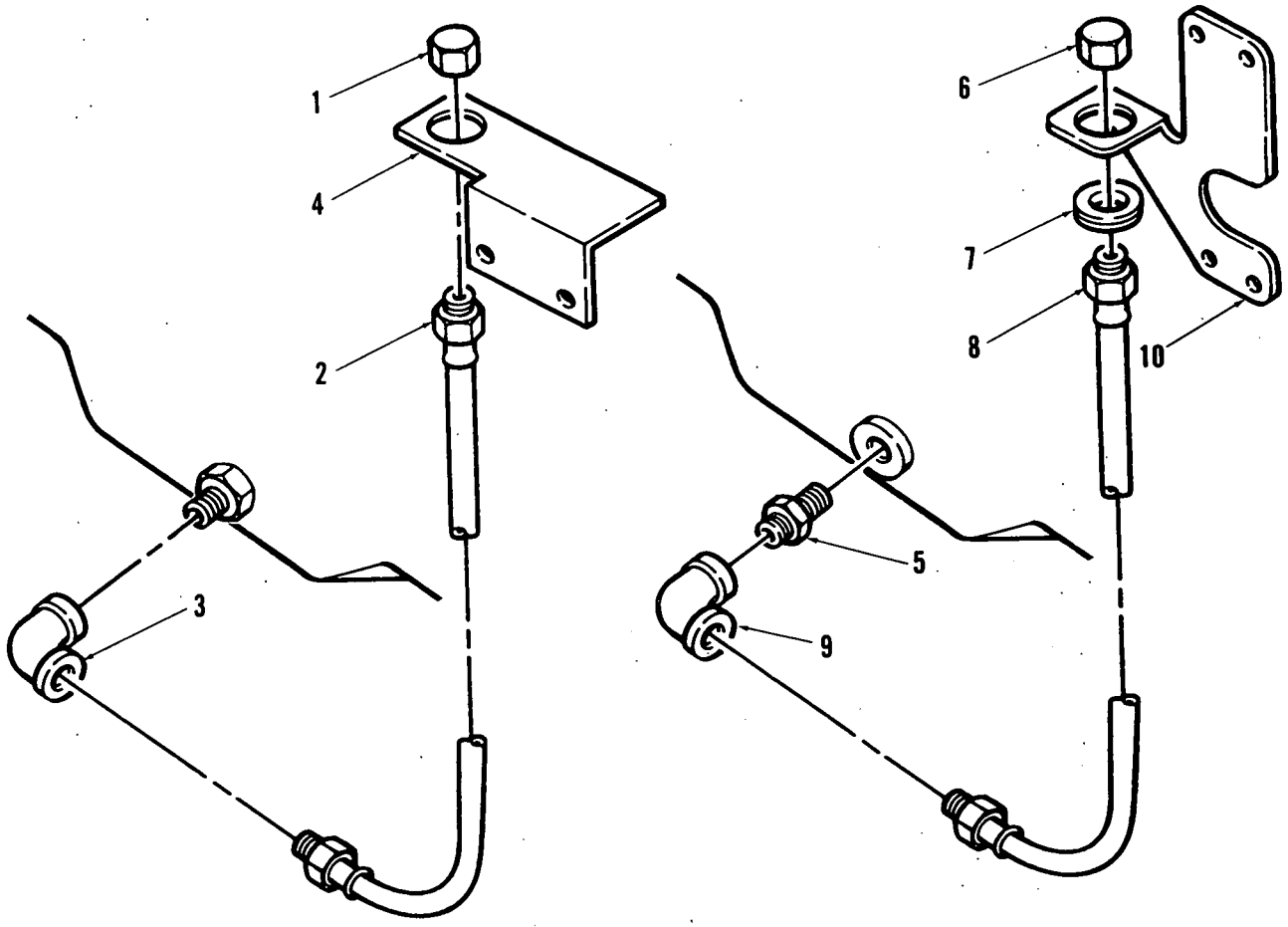

REF NO.	PART NO.	QTY USED	PART DESCRIPTION
1	505-0126	1	Cap, Pipe (3/8-18)
2	501-0462	1	Line, Flexible (3/8-18 Male Both Ends x 22")
3	505-0047	1	Elbow, Pipe - 90° - Reducing (1/2-14 x 3/8-18)
4	102-1198	1	Bracket, Mounting - Oil Drain
5	102-1237	1	Adapter, Pipe (M18 x 1/2-14)
6	502-0876	1	Cap, Pipe (1/2-14)
7	508-0250	1	Grommet
8	501-0484	1	Line, Flexible (1/2-14 Male Both Ends x 18")
9	502-0908	1	Elbow, Pipe - 90° - Brass (1/2-14)
10	102-1235	1	Bracket, Mounting - Oil Drain

Oil Fill

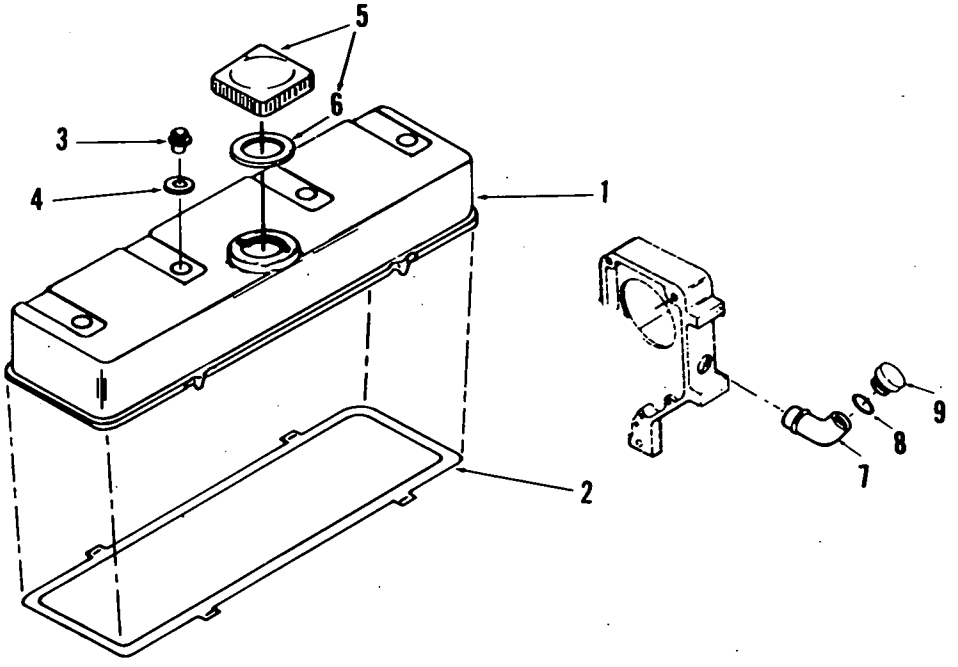

REF NO.	PART NO.	QTY USED	PART DESCRIPTION	REF NO.	PART NO.	QTY USED	PART DESCRIPTION
1	115-0345	1	Cover, Rocker	6	123-1518	1	Gasket, Oil Fill Cap
2	115-0254	1	Gasket, Rocker Cover	7	123-1558	1	Tube, Oil Fill
3	115-0320	4	Capnut, Rocker Cover	8	509-0142	1	Seal, O-Ring
4	115-0232	4	Gasket, Capnut	9	123-1647	1	Cap, Oil Fill
5	123-1605	1	Cap, Oil Fill (Includes Gasket)				

Intake Manifold

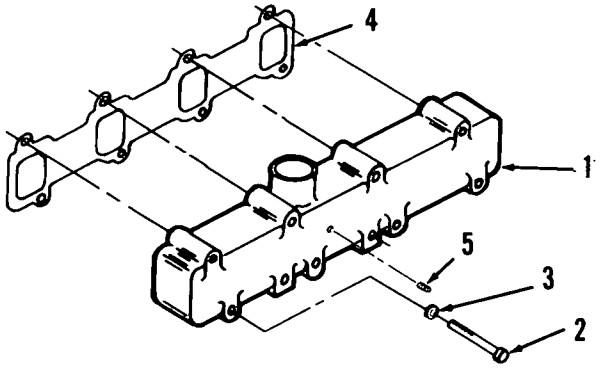

EXS-1050

REF NO.	PART NO.	QTY USED	PART DESCRIPTION	REF NO.	PART NO.	QTY USED	PART DESCRIPTION
1	154-2460	1	Kit, Manifold - Intake (Includes Plug)	3	740-1006	8	Washer, Flat (M8)
2	718-1801	8	Screw, Cap - Hex Head (M8 x 85mm)	4	154-2261	1	Gasket, Intake Manifold
				5	505-0274	1	Plug, Pipe - Countersunk Hex (1/8")

Exhaust Manifold

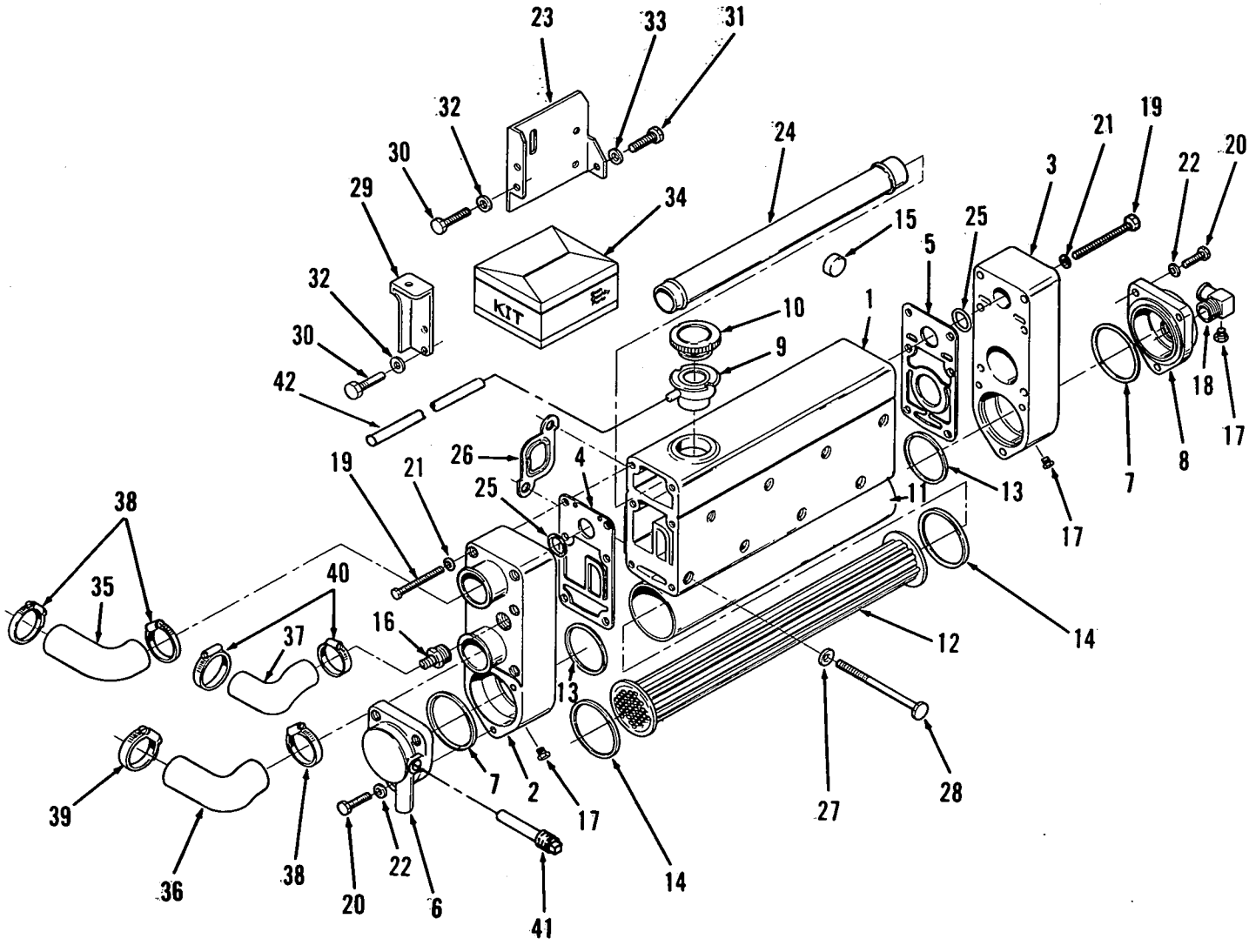

Exhaust Manifold

REF NO.	PART NO.	QTY USED	PART DESCRIPTION
1	154-2346	1	Manifold, Exhaust
2	154-2347	1	Cap, Manifold End (Front)
3	154-2348	1	Cap, Manifold End (Rear)
4	154-2353	1	Gasket, Manifold Front Cap
5	154-2352	1	Gasket, Manifold Rear Cap
6			Cover, Heat Exchanger - Front
	154-2349	1	Without Opening for Zinc Pencil
	154-2668	1	With Opening for Zinc Pencil
7	509-0179	2	Seal, O-Ring - Heat Exchanger Cover
8	154-2350	1	Cover, Heat Exchanger (Rear)
9	130-2304	1	Neck, Filler
10	130-2248	1	Cap, Pressure
11	130-2091	1	Shell, Heat Exchanger
12	130-2116	1	Core, Heat Exchanger
13	130-2147	2	Gasket, Heat Exchanger Shell
14	130-2130	2	Gasket, Heat Exchanger
15	517-0142	3	Plug, Cup
16	502-0836	1	Adapter, Pipe to Hose
17	502-0153	3	Plug, Pipe (1/4")
18	502-0881	1	Elbow, 90°
19	720-1044	8	Screw, Cap - Hex Head (M8 x 60mm)
20	718-1022	6	Screw, Cap - Hex Head (M6 x 25mm)
21	740-1006	8	Washer, Flat (M8)
22	740-1004	6	Washer, Flat (M6)
23	403-2128	1	Bracket, Lifting
24	154-2431	1	Tube, Coolant Flow
25	509-0190	2	Seal, O-Ring - Coolant Flow Tube
26	154-2162	4	Gasket, Exhaust Manifold
27	740-1802	8	Washer, Flat (M8)
28	806-2001	8	Screw, Cap - Counter Bore
29	403-2140	1	Bracket, Lifting
30	718-1054	4	Screw, Cap - Hex Head (M10 x 25mm)
31	718-1074	1	Screw, Cap - Hex Head (M12 x 30mm)
32	740-1008	4	Washer, Flat (M10)
33	740-1010	1	Washer, Flat (M12)
34	168-0172	1	Kit, Gasket - Heat Exchanger
35	503-1123	1	Hose, Coolant - Upper
36	503-1165	1	Hose, Coolant - Lower
37	503-1124	1	Hose, Coolant - Manifold
38	503-1141	3	Clamp, Hose (#32)
39	503-1140	1	Clamp, Hose (#28)
40	503-1137	2	Clamp, Hose (#16)
41	130-3023	1	Pencil, Zinc
42	503-0539	1	Hose, Overflow

Exhaust Elbow

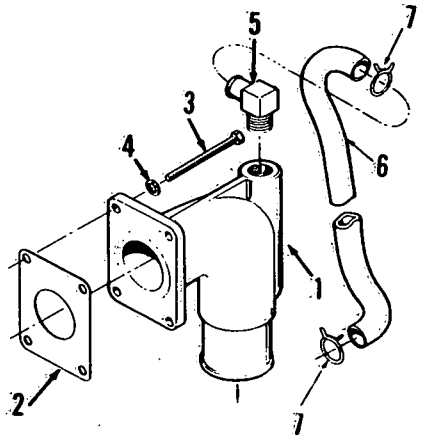

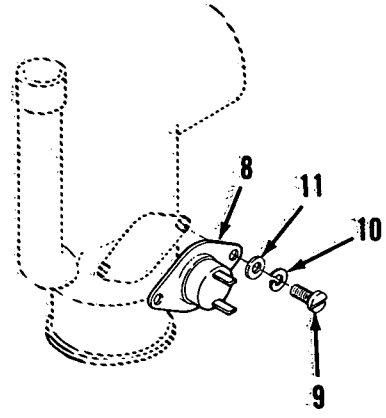

REF NO.	PART NO.	QTY USED	PART DESCRIPTION
1	154-2409	1	Elbow, Exhaust
2	154-2373	1	Gasket, Exhaust Elbow
3	720-1047	4	Screw, Cap - Hex Head (M8 x 75mm)
4	740-1006	4	Washer, Flat (M8)
5	502-0881	1	Elbow, 90°
6	503-1242	1	Hose, Exhaust Cooling
7	503-1138	2	Clamp, Hose
8	309-0484	1	Switch, High Exhaust Temperature (S3)
9	822-3041	2	Screw, Machine - Pan Head (M3 x 5mm)
10	850-0020	2	Washer, Lock - Spring (#6)
11	526-0003	2	Washer, Flat (#8)

Coolant Outlet Connector

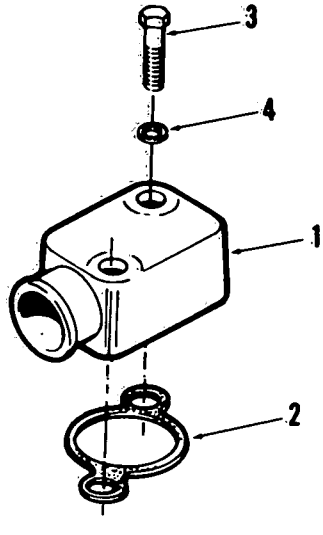

REF NO.	PART NO.	QTY USED	PART DESCRIPTION
1	309-0518	1	Cover, Thermostat (Includes Gasket)
2	309-0417	1	Gasket, Thermostat Cover
3	718-1048	2	Screw, Cap - Hex Head (M8 x 80mm)
4	740-1006	2	Washer, Flat (M8)

Coolant Pump

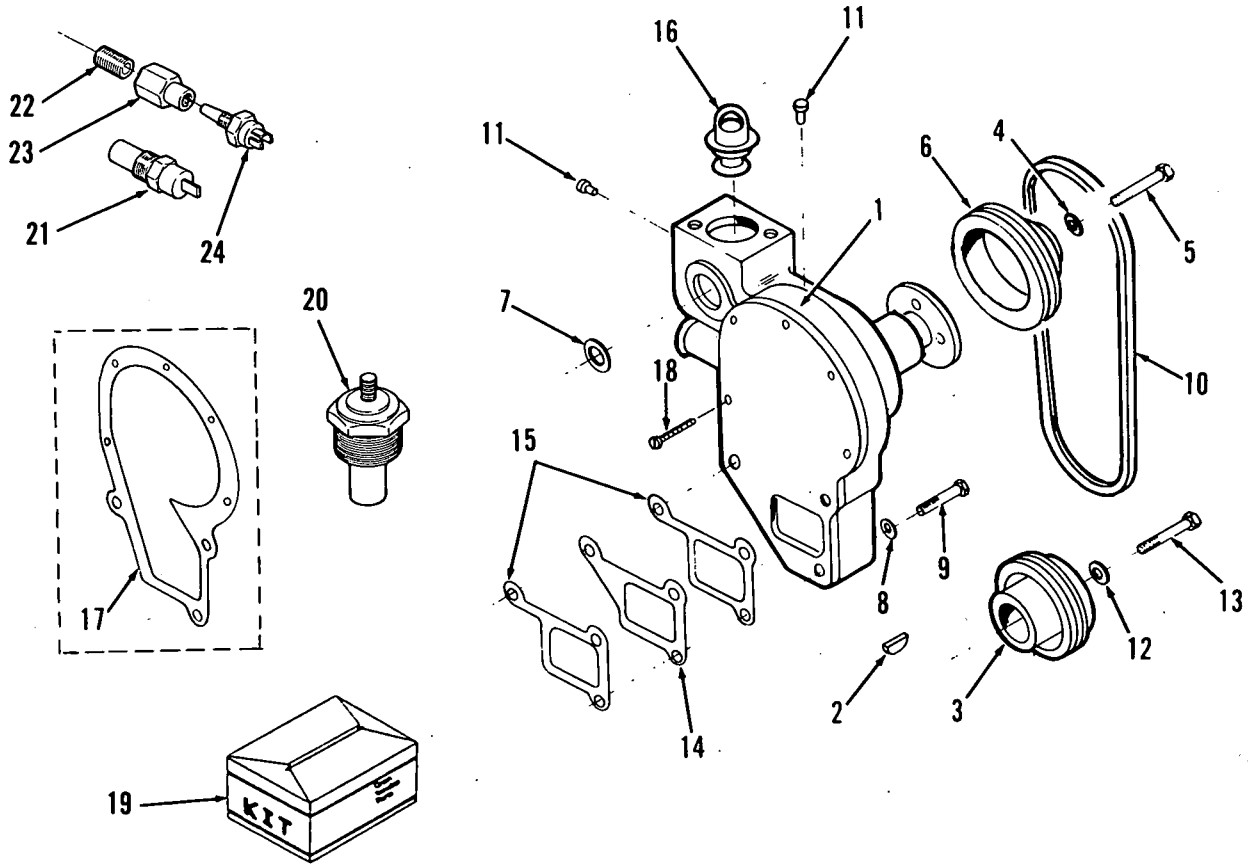

REF NO.	PART NO.	QTY USED	PART DESCRIPTION
1	131-0350	1	Kit, Coolant Pump (Includes Mounting Gaskets)
2	515-0245	1	Key, Crankshaft Pulley
3	104-1472	1	Pulley, Crankshaft
4	740-1006	4	Washer, Flat (M8)
5	718-1035	4	Screw, Cap - Hex Head (M8 x 16mm)
6	131-0341	1	Pulley, Coolant Pump
7	509-0264	1	Seal, O-Ring
8	740-1006	3	Washer, Flat (M8)
9	718-1044	3	Screw, Cap - Hex Head (M8 x 60mm)
10	511-0147-14	1	Belt, Coolant Pump
11			Plug
	502-0775	3	* 3/8" (Pipe)
	502-0317	1	3/4" (Brass)
12	526-0283	1	Washer, Flat (M8)
13	720-1123	1	Screw, Cap - Hex Head (M16 x 60mm)
14	131-0324	1	Spacer, Coolant Pump
15	131-0294	2	Gasket, Coolant Pump Mounting
16	309-0458	1	Kit, Thermostat (Includes Gaskets)
17	131-0334	1	Gasket, Coolant Pump Backplate
18	815-0612	5	Screw, Countersunk - Flat Head - Torque Drive (Special)
19	541-0214-02	1	Kit, Repair - Coolant Pump (Includes Gaskets, Seal, Hub, Bearing, Impeller and Backplate Mounting Screws)
20	193-0318	1	#Sender, Water Temperature (E2)
21	309-0437	1	Switch, Thermostat - High Engine Coolant Temperature (S2)
22	505-0306	1	#Nipple, Close (3/8" x 1-1/4")
23	505-0153	1	#Coupling, Reducer (3/8" to 1/4")
24	193-0322	1	#Sender, Low Coolant Level (S5)

* - Parts Used on Sets Without Control Mounted DC Gauges
\# - Parts Used on Sets With Control Mounted DC Gauges

Raw Water Pump

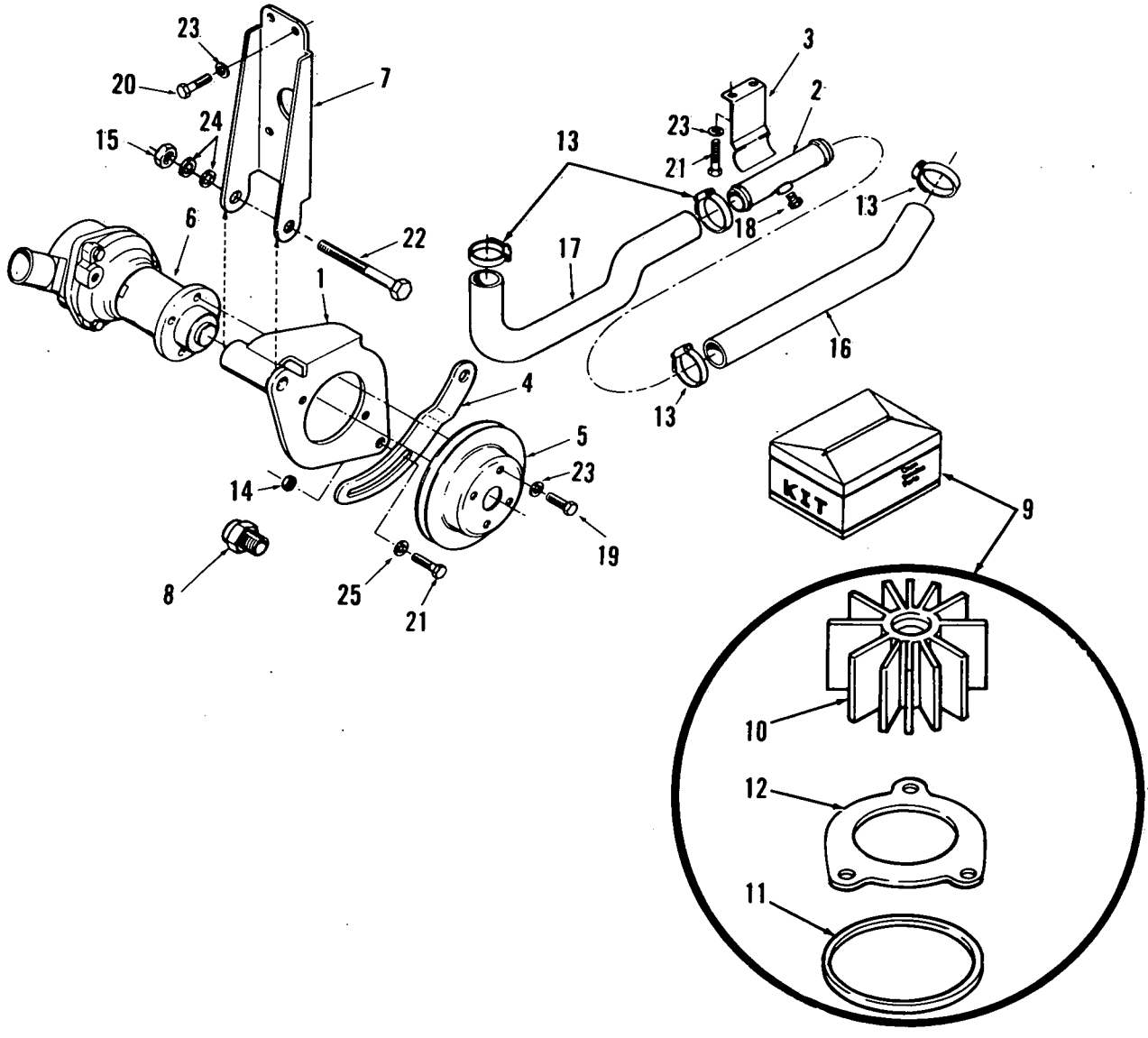

REF NO.	PART NO.	QTY USED	PART DESCRIPTION
1	130-2140	1	Bracket, Water Pump
2	130-2242	1	Tube, Raw Water
3	130-2259	1	Bracket, Raw Water Tube
4	130-2292	1	Strap, Adjusting
5	131-0342	1	Pulley, Water Pump
6	132-0275	1	Pump Assembly, Raw Water
7	191-1332	1	Bracket, Water Pump Mounting
8	502-0836	1	Adapter, Pipe to Hose
9			Kit, Service - Raw Water Pump
	132-0328	1	Major Repair Kit (Includes Impeller, Gasket, "O" Ring, Cam, Seat and Seal Assembly, Wear Plate and Bearing)
	132-0276	1	Minor Repair Kit (Includes Seat and Seal Assembly and Parts Marked *)
	132-0329	1	Shaft Kit
10	132-0317	1	*Impeller
11	132-0293	1	*Gasket, Ring
12	132-0294	1	*Gasket, Cover

REF NO.	PART NO.	QTY USED	PART DESCRIPTION
13	503-1138	4	Clamp, Hose (#20)
14	750-1006	1	Nut, Hex (M8)
15	750-1008	1	Nut, Hex (M10)
16	503-1223	1	Hose, Raw Water
17	503-1224	1	Hose, Raw Water
18	505-0846	1	Plug, Pipe - Hex (1/4")
19	718-1034	4	Screw, Cap - Hex Head (M8 x 14mm)
20	718-1036	2	Screw, Cap - Hex Head (M8 x 20mm)
21	718-1037	5	Screw, Cap - Hex Head (M8 x 25mm)
22	800-2100	1	Screw, Cap - Hex Head (M10 x 100mm)
23	740-1006	10	Washer, Flat (M8)
24	740-1008	2	Washer, Flat (M10)
25	526-2106	1	Washer, Flat (M8)

* - Parts Included in 132-0276 Water Pump Service Kit.

Generator Adapter

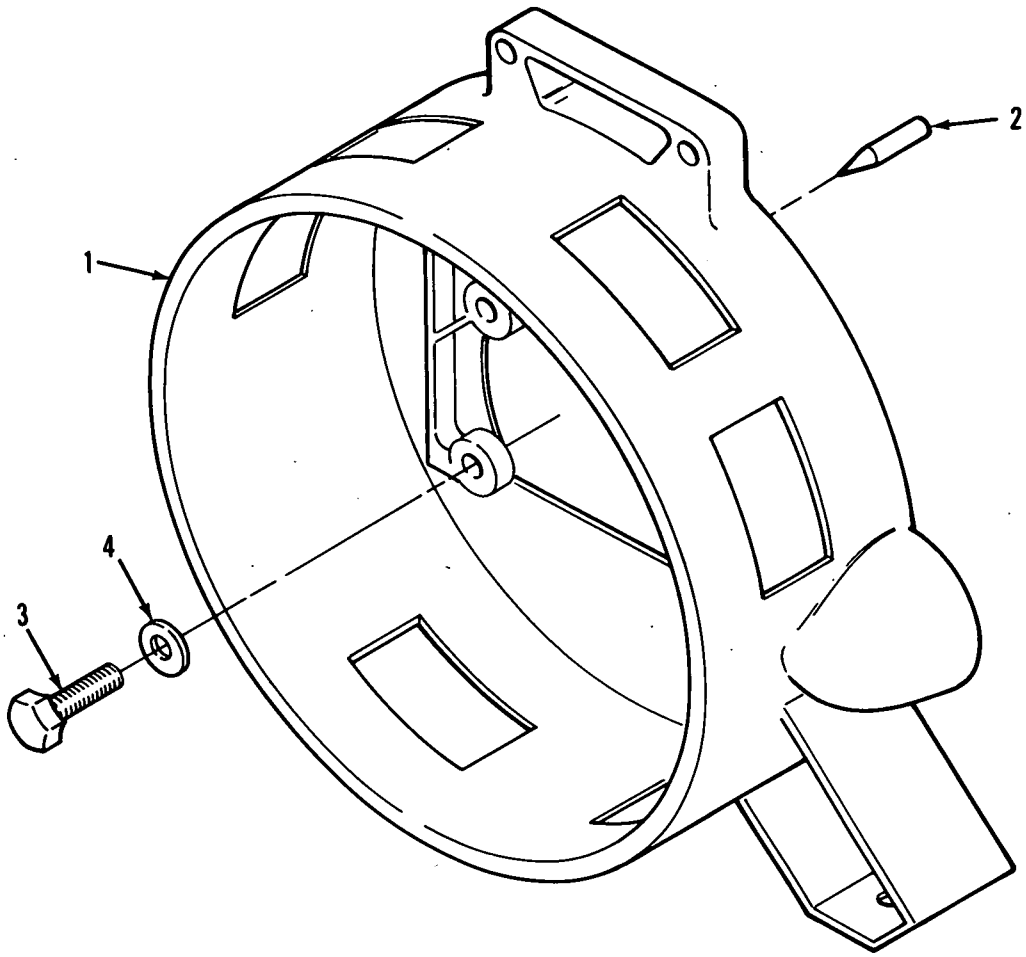

REF NO.	PART NO.	QTY USED	PART DESCRIPTION
1			Adapter Assembly, Generator (Includes Timing Indicator)
	231-0267	1	Without Tapped Magnetic Speed Sensor Mounting Hole
	231-0289	1	With Tapped Magnetic Speed Sensor Mounting Hole

REF NO.	PART NO.	QTY USED	PART DESCRIPTION
2	160-1292	1	Indicator, Timing
3	718-1078	6	Screw, Cap - Hex Head (M12 x 50mm)
4	740-1801	6	Washer, Flat (M12)

Flywheel

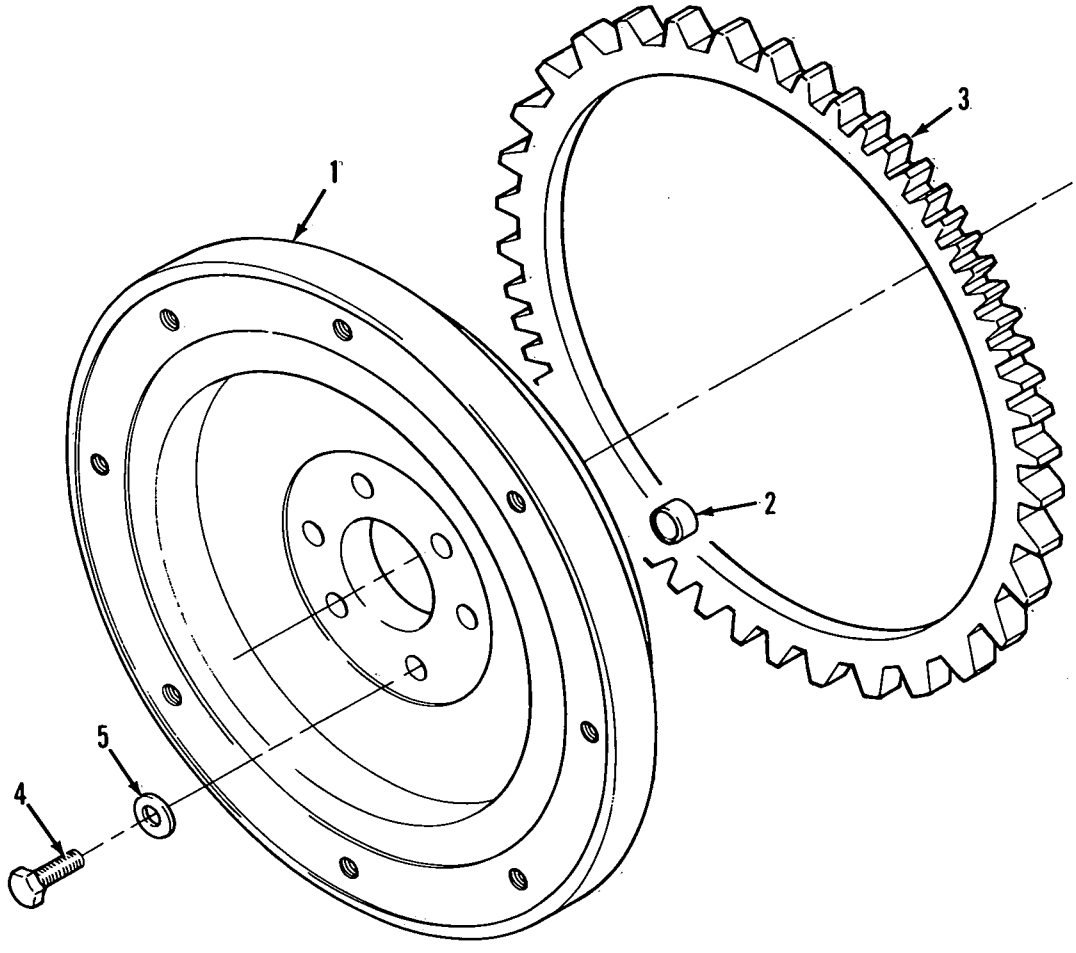

REF NO.	PART NO.	QTY USED	PART DESCRIPTION
1	104-1462	1	Flywheel Assembly (Includes Ring Gear and Alignment Pin)
2	104-1171	1	Pin, Alignment
3	104-1169	1	Gear, Ring
4	720-1804	6	Screw, Cap - Flange Hex Head (M10 x 38mm)
5	740-1008	6	Washer, Flat (M10)

Starter

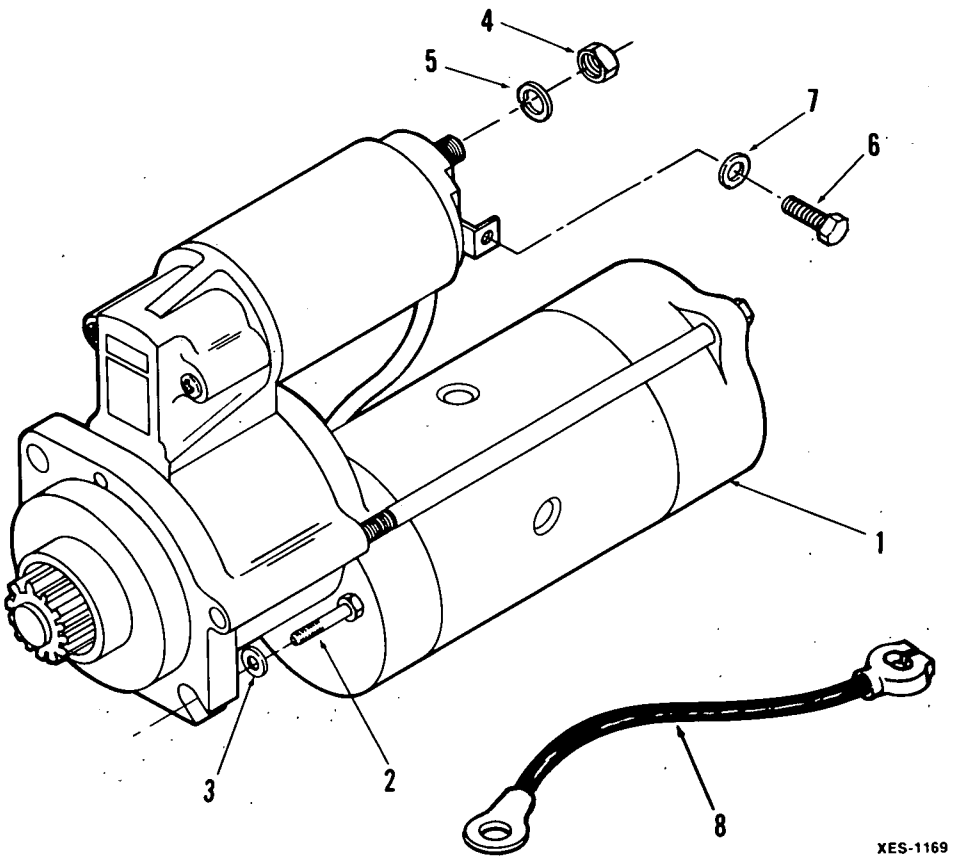

REF NO.	PART NO.	QTY USED	PART DESCRIPTION
1			Starter (See Separate Page for Components) (Mitsubishi Starters Include Switch Terminal Hardware)
	191-1394	1	12 Volt DC (Mitsubishi)
	191-1550	1	24 Volt DC (Mitsubishi)
	191-0828	1	32 Volt DC (Prestolite - Not Illustrated) (Note: Starter is labeled 24 volt but is adequate for 32 volt systems.)
2	720-1806	2	Screw, Cap - Flanged Hex Head (M12 x 30mm)
3			Washer, Flat (M12)
	740-1010	2	Mitsubishi
	740-1801	2	Prestolite
4	860-2008	1	Nut, Hex (M8) B+ Terminal (Mitsubishi)
5	850-2008	1	Washer, Lock - Spring (M8) B+ Terminal (Mitsubishi)
6	718-1002	1	Screw, Cap - Hex Head (M5 x 8mm) Solenoid Terminal (Mitsubishi)
7	850-2005	1	Washer, Lock - Spring (M5) Solenoid Terminal (Mitsubishi)
8	336-9474	1	Lead, Ground - 32 Volt DC Starter

Starter Components
(Mitsubishi)

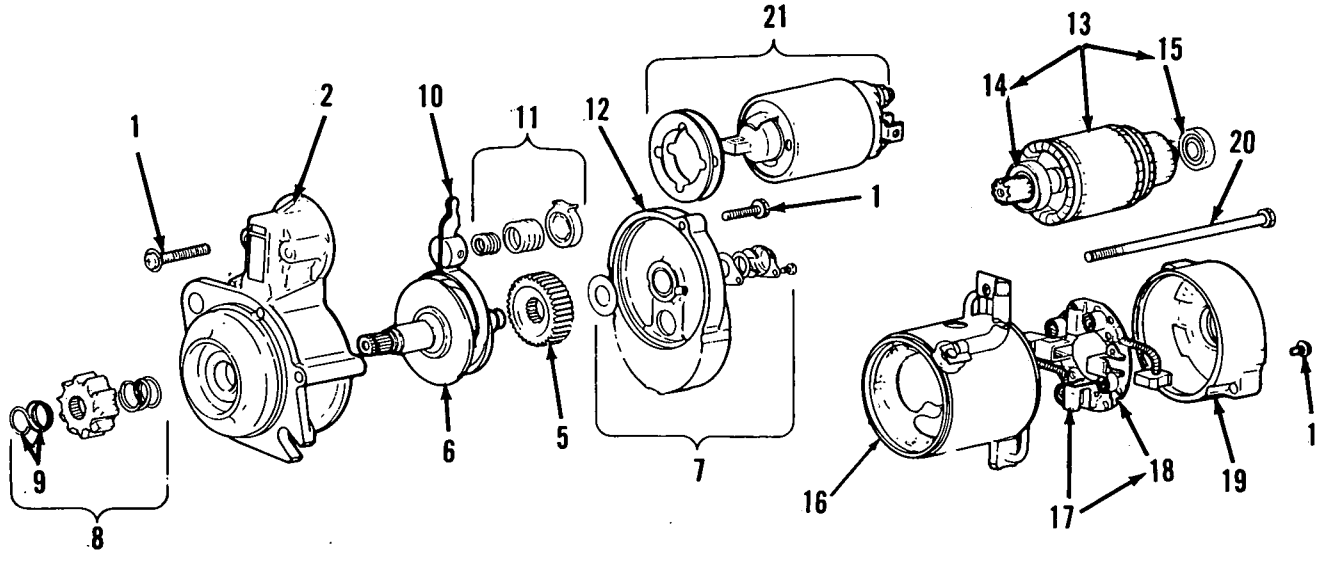

REF NO.	PART NO.	QTY USED	PART DESCRIPTION
			Starter (Complete)
	191-1394	1	12 Volt DC
	191-1550	1	24 Volt DC
1	191-1450	1	Screw Set
2			Bracket Assembly, Front (Includes Bearing)
	191-1449	1	12 Volt DC
	191-1605	1	24 Volt DC
5	191-1446	1	Gear
6	191-1445	1	Clutch
7	191-1444	1	Cover Set (Includes Cover, Plate, Washers, Snap Ring and Screws)
8	191-1443	1	Pinion Set (Includes Pinion, Spring and Stopper Set)
9	191-1442	1	Stopper Set (Includes Stopper and Ring)
10	191-1441	1	Lever Assembly
11	191-1440	1	Spring Set
12	191-1439	1	Bracket Assembly, Center
13			Armature Assembly (Includes Bearings)
	191-1438	1	12 Volt DC
	191-1606	1	24 Volt DC
14	191-1437	1	Bearing, Center
15	191-1436	1	Bearing, Rear
16			Yoke Assembly (Includes Pole Shoes, Field Coil and Positive Brushes)
	191-1435	1	12 Volt DC
	191-1607	1	24 Volt DC
17			Holder, Brush (Includes Negative Brushes)
	191-1434	1	12 Volt DC
	191-1608	1	24 Volt DC
18	191-1433	4	Spring, Brush
19	191-1432	1	Bracket, Rear
20	191-1431	1	Bolt Set
21			Switch Assembly
	191-1430	1	12 Volt DC
	191-1609	1	24 Volt DC

Starter Components
(Prestolite)

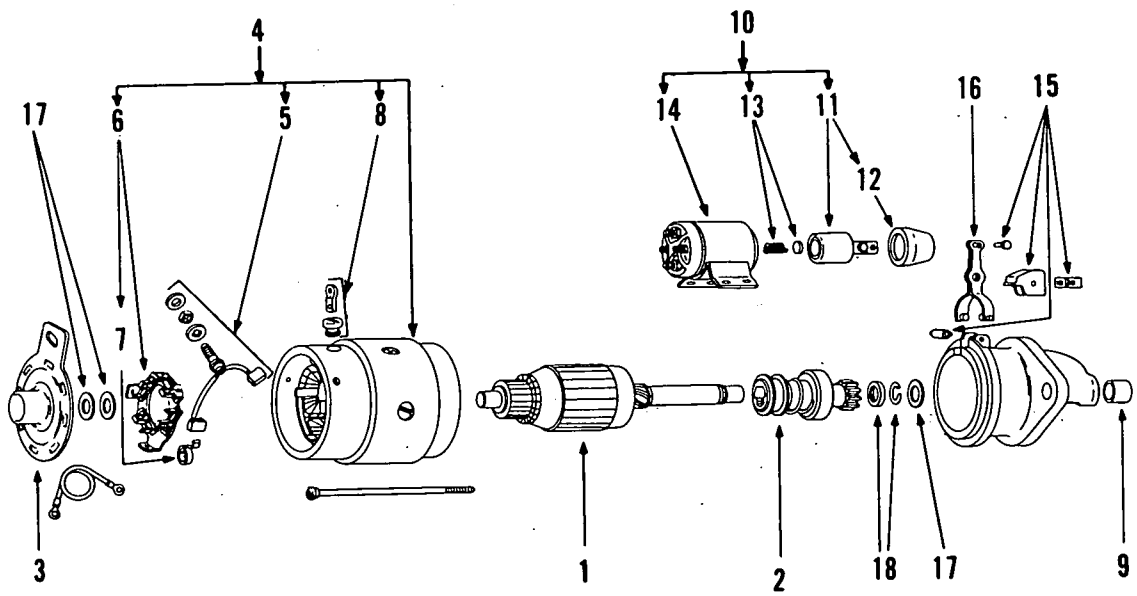

ES-1407-1

REF NO.	PART NO.	QTY USED	PART DESCRIPTION
	191-0828	1	Starter (Complete)
1	191-1121	1	Armature
2	191-1122	1	Clutch
3	191-1128	1	Head, Commutator End
4	191-1123	1	Frame and Field Assembly (Includes Brush Set, Brush Plate Assembly and Connector Package)
5	191-1124	1	Brush Set
6	191-1125	1	Plate Assembly, Brush (Includes Springs)
7	191-1126	1	Spring Set
8	191-1127	1	Connector Package
9	191-1130	1	Bearing
10	191-1194	1	Solenoid Assembly (Includes Moving Core Assembly, Switch and Spring and Plug Package)
11	191-1133	1	Core Assembly, Moving (Includes Boot)
12	191-1134	1	Boot, Rubber
13	191-1137	1	Spring and Plug Package
14	191-1136	1	Switch, Solenoid
15	191-1132	1	Parts Package, Yoke
16	191-1140	1	Yoke
17	191-1139	1	Washer Package, Thrust
18	191-1135	1	Stop and Lock Ring Package

Glow Plug

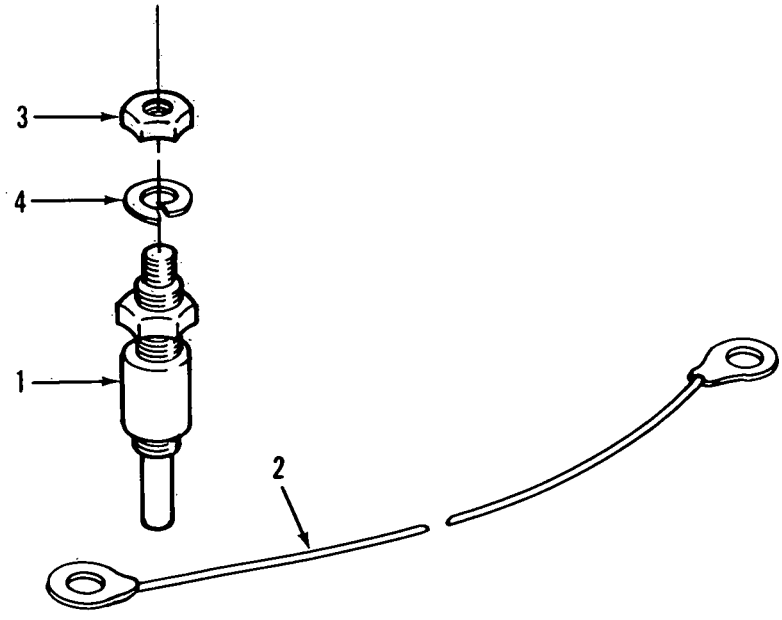

REF NO.	PART NO.	QTY USED	PART DESCRIPTION	REF NO.	PART NO.	QTY USED	PART DESCRIPTION
1	333-0220	4	Plug, Glow	3	750-1002	4	Nut, Hex (M5)
2	336-4131	3	Lead, Glow Plug (12 Volt DC)	4	850-2005	4	Washer, Lock - Spring (M5)

Front Engine Mount

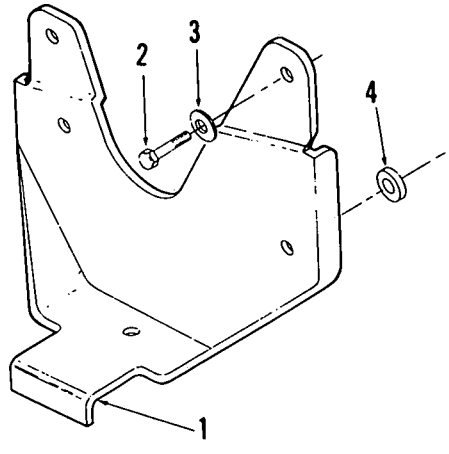

REF NO.	PART NO.	QTY USED	PART DESCRIPTION	REF NO.	PART NO.	QTY USED	PART DESCRIPTION
1	403-1925	1	Bracket, Mount	3	740-1010	4	Washer, Flat (M12)
2			Screw, Cap - Hex Head	4	403-1932	2	Spacer, Bracket Mounting
	718-1086	2	M12 x 90mm (Top)				
	718-1802	2	M12 x 95mm (Bottom)				

Air Silencer

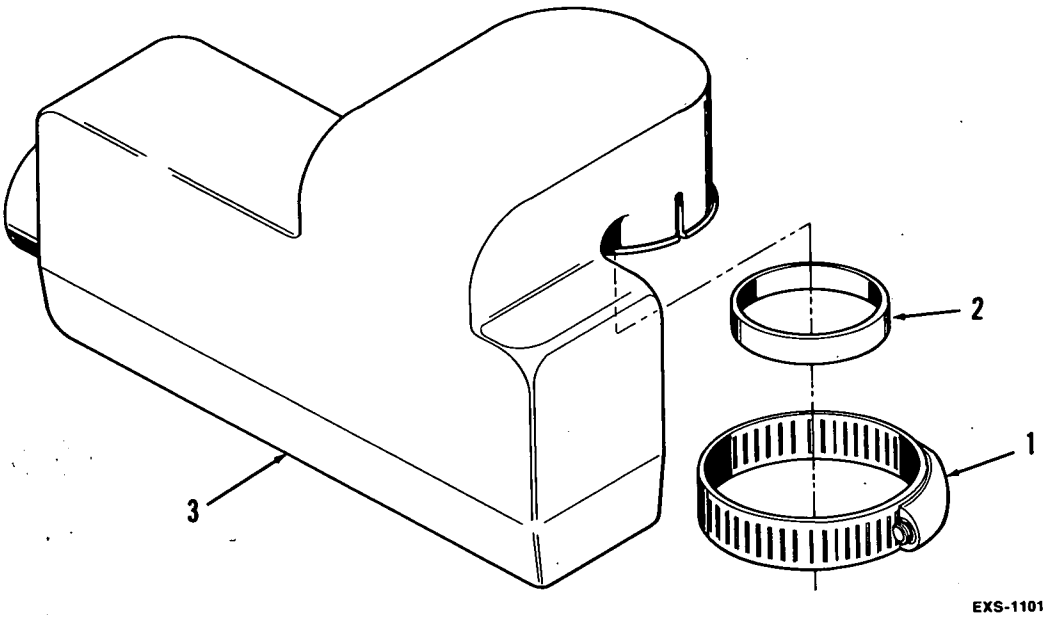

REF NO.	PART NO.	QTY USED	PART DESCRIPTION
1	503-0648	1	Clamp
2	140-1857	1	Sleeve
3	140-1848	1	Silencer, Air Intake

Belt Guard

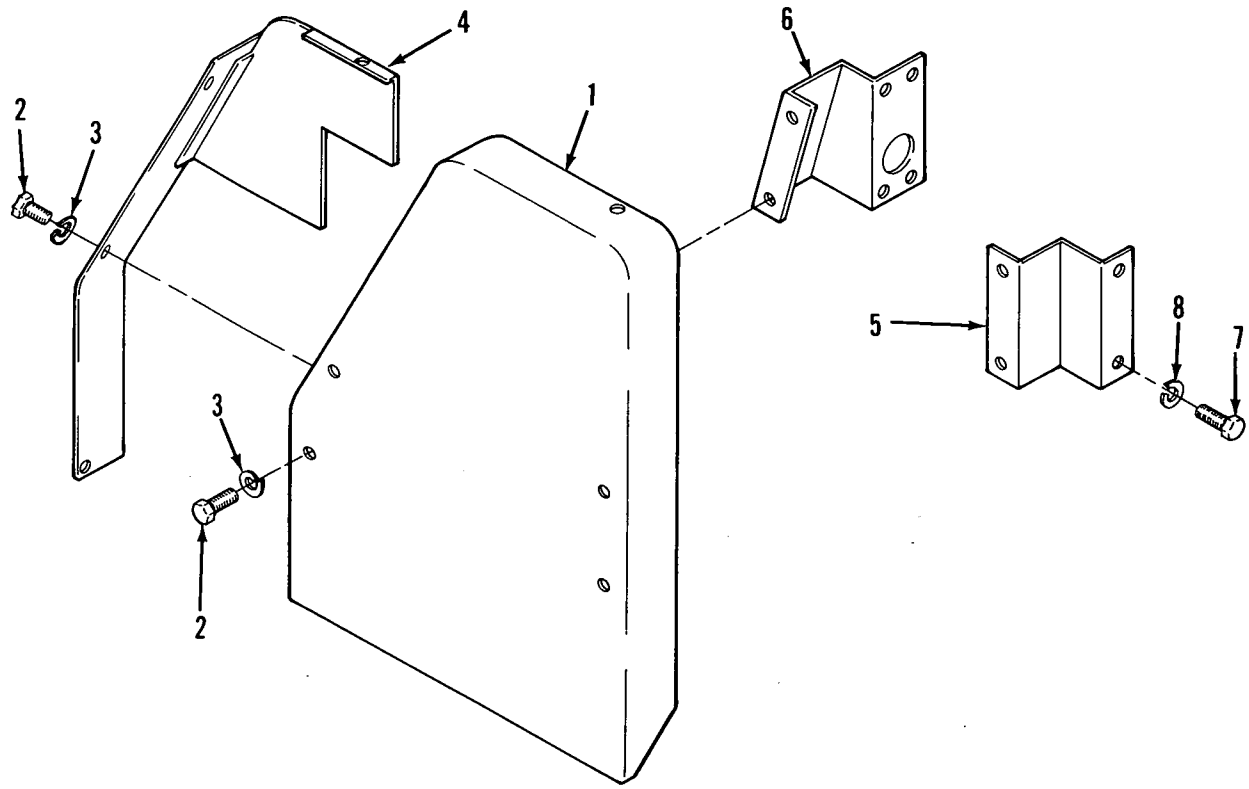

REF NO.	PART NO.	QTY USED	PART DESCRIPTION
1	130-3008	1	Panel, Front
2	800-2029	8	Screw, Cap - Hex Head (M6 x 12mm)
3	850-2006	8	Washer, Lock - Spring (M6)
4	130-3007	1	Panel, Side
5	130-2201	1	Bracket, Pulley Guard (Left Hand)
6	130-2202	1	Bracket, Pulley Guard (Right Hand)
7	800-2056	2	Screw, Cap - Hex Head (M8 x 16mm)
8	850-2008	2	Washer, Lock - Spring (M8)

Drip Pan and Mounting Cushions

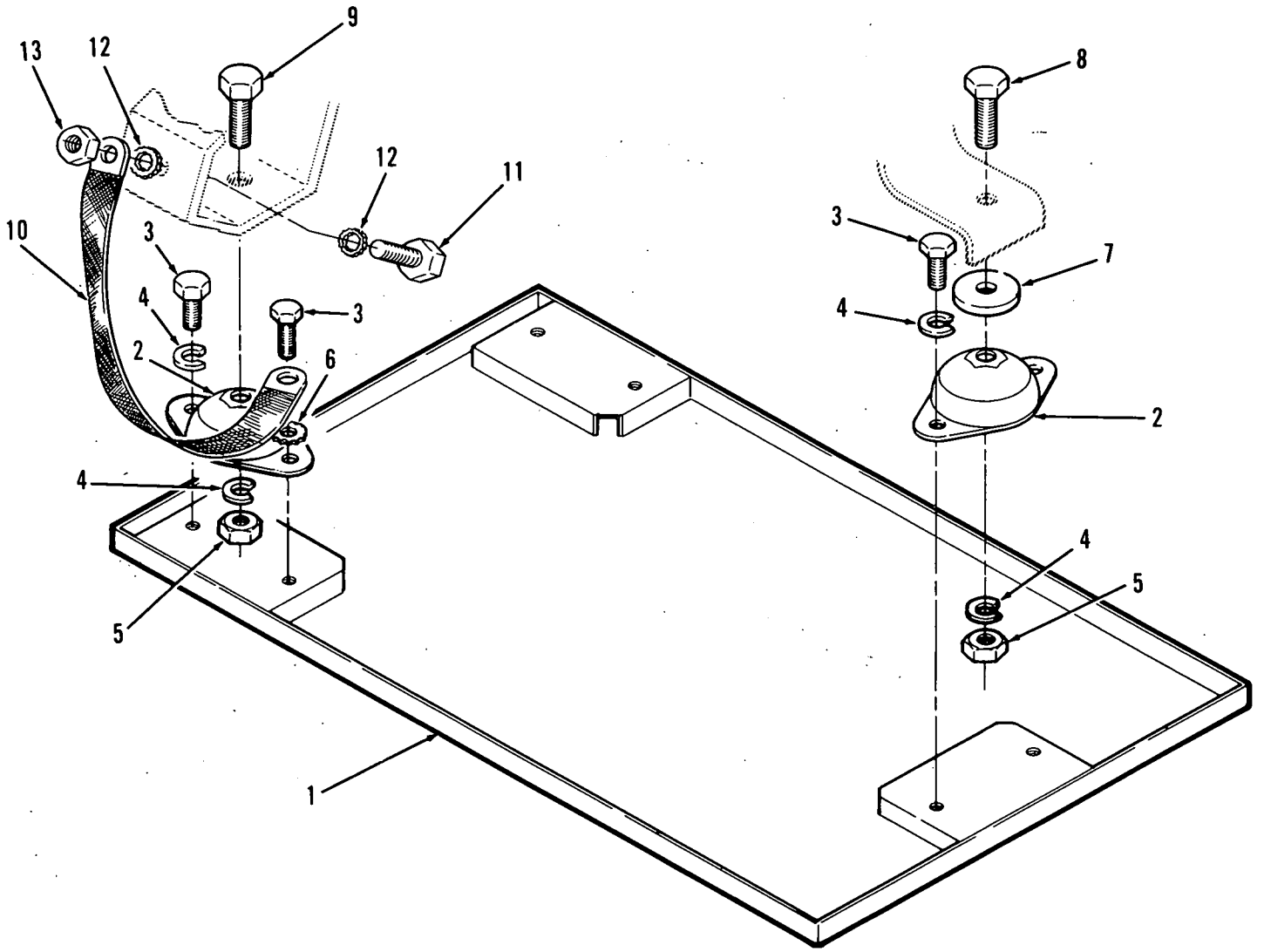

REF NO.	PART NO.	QTY USED	PART DESCRIPTION
1	403-2125	1	Pan, Drip
2	402-0466	3	Cushion, Mounting
3	718-1072	6	Screw, Cap - Hex Head (M12 x 20mm)
4	850-2012	8	Washer, Lock - Spring (M12)
5	750-1010	3	Nut, Hex (M12)
6	853-2012	1	Washer, Lock - ET (M12) Ground Strap Mounting
7	402-0503	1	Spacer
8	718-1076	1	Screw, Cap - Hex Head (M12 x 40mm)
9	718-1074	2	Screw, Cap - Hex Head (M12 x 30mm)
10	337-1837	1	Strap, Ground - Engine
11	800-2059	1	Screw, Cap - Hex Head (M8 x 30mm)
12	856-1008	2	Washer, Lock - EIT (5/16")
13	860-2008	1	Nut, Hex (M8)

Sound Shield Housing

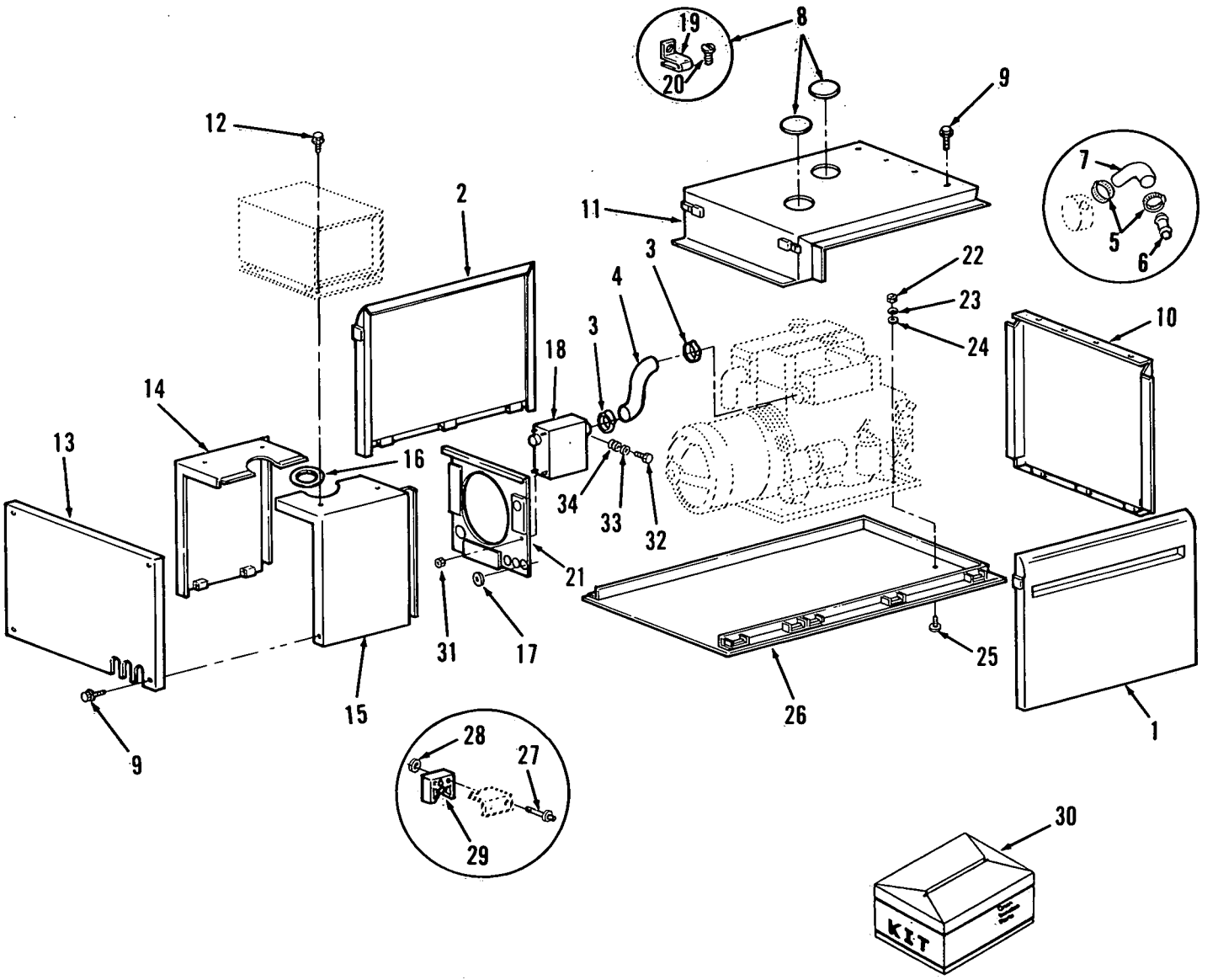

Sound Shield Housing

REF NO.	PART NO.	QTY USED	PART DESCRIPTION
1	405-3131	1	*Door - Right Hand
2	405-3130	1	*Door - Left Hand
3	503-0354	2	Clamp, Hose
4			Hose, Air Inlet
	503-1226	1	Single Phase Sets
	503-1339	1	Three Phase Sets
5	503-0189	2	Clamp, Hose
6	502-0874	1	Union, Hose
7	503-1258	1	Hose, Water
8	405-3292	2	Cover Assembly, Access (Includes Speed Nuts and Screws)
9	815-0573	16	Screw, Hex Washer Head - Slotted (1/4-20 x 3/4")
10	405-3138	1	*Panel, Front
11	405-3174	1	*Roof
12	821-0008	4	Screw, Locking Head - Flange (1/4-20 x 5/16")
13	405-3155	1	*Panel, Rear
14	405-3140	1	*Panel, Generator - Left Hand
15	405-3141	1	*Panel, Generator - Right Hand
16	508-1026	1	Edging
17	508-0055	6	Grommet
18	140-1879	1	Resonator, Air Intake
19	870-0261	6	Nut, Speed
20	815-0562	6	Screw, Pan Head - Cross Recessed (#10 x 5/16")
21	405-3149	1	*Baffle
22	862-0016	4	Nut, Hex (1/2-13)
23	856-0013	4	Washer, Lock - EIT (1/2")
24	526-0322	4	Washer, Flat (1/2")
25	816-0248	4	Bolt, Carriage (1/2-13 x 2")
26	405-3249	1	Base (Includes Plywood, Rails, Screws, Pins and Push Nuts)
27	818-0150	26	Rivet
28	526-0003	26	Washer, Flat (#8)
29	405-1872	13	Clip, Door - Plastic
30	405-3258	1	Kit, Sound Shield - Field Installation
31	870-0212	4	Nut, Self-locking - Flange (1/4-20)
32	800-2034	1	Screw, Cap - Hex Head (M6 x 20mm) Three Phase Sets
33	850-2006	1	Washer, Lock - Spring (M6) Three Phase Sets
34	526-0021	4	Washer, Flat (1/4") Three Phase Sets

* - These parts include (where required) insulation, bottom edge seals, edging, door catches, door strikes, door clips and retainer nuts.

Muffler Kit

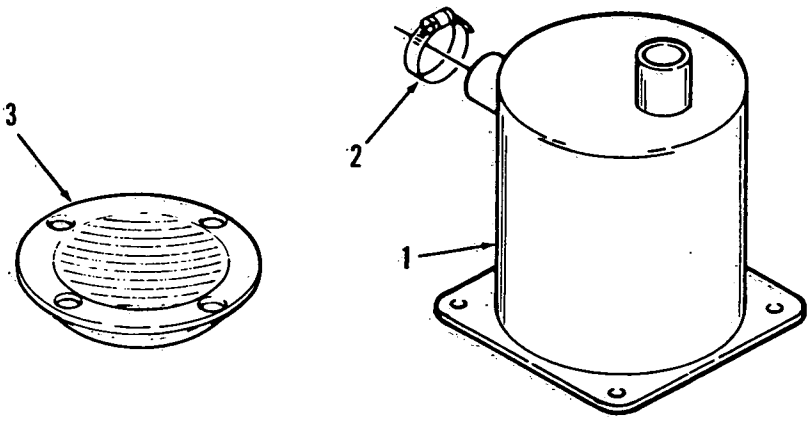

REF NO.	PART NO.	QTY USED	PART DESCRIPTION
	155-2017	1	Kit, Muffler (Includes Parts Listed Below) (2-1/2" Inlet and Outlet)
1	155-2010	1	Muffler
2	503-0354	8	Clamp
3	155-1002	1	Strainer

Siphon Break Kit

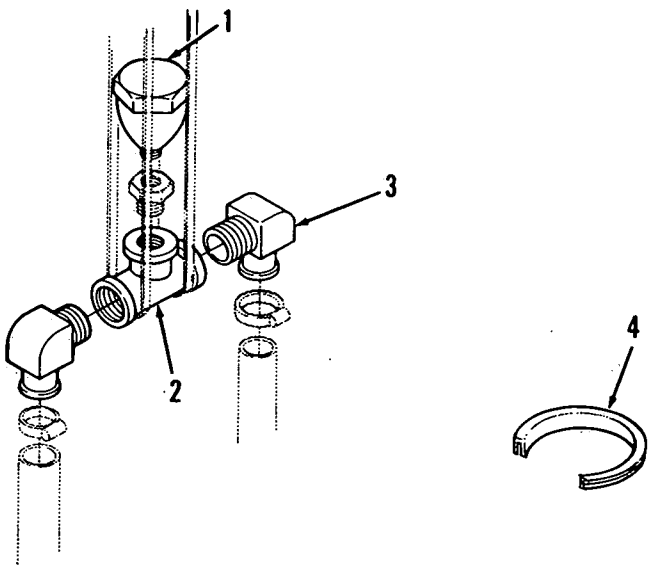

REF NO.	PART NO.	QTY USED	PART DESCRIPTION
	155-2014	1	Kit, Siphon Break (Includes Parts Listed Below)
1	504-0062	1	Valve, Vacuum Relief
2	502-0883	1	Tee, Pipe - Brass (3/4" x 3/4" x 1/2")
3	502-0881	2	Elbow, Male - 90° (Special)
4	508-1039	1	Edging (Knockouts)

Oil Pressure Switch

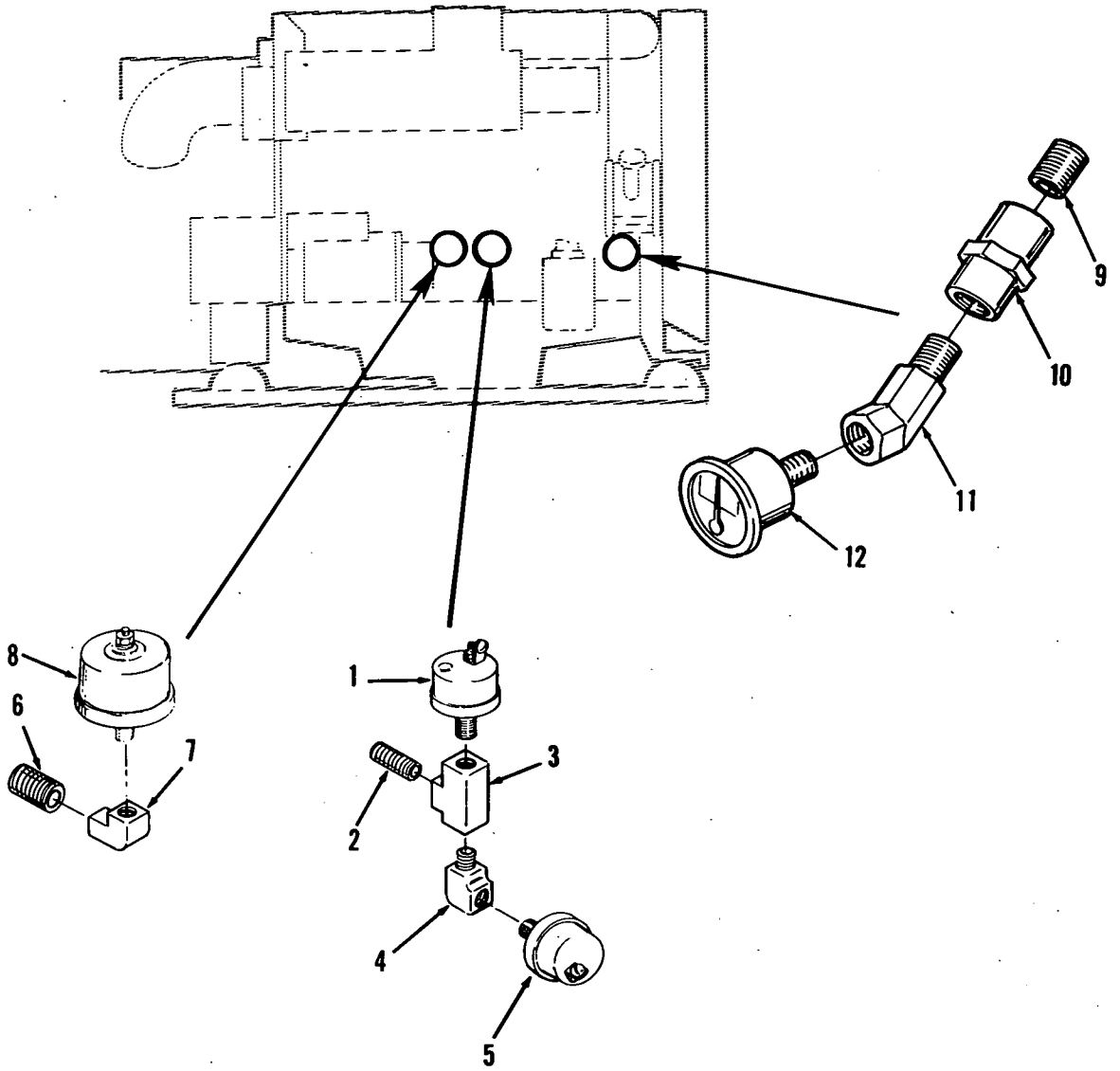

REF NO.	PART NO.	QTY USED	PART DESCRIPTION
1	309-0169	1	Switch, Oil Pressure (Closes at 14 lbs. Descending) (S1)
2	502-0046	1	Nipple, Close (1/8" x 3/4")
3	502-0079	1	Tee (1/8")
4	502-0020	1	Elbow, Street - 90° (1/8")
5	309-0104	1	Switch, Oil Pressure (Closes at 5 lbs. Increasing) (S1)
6	502-0046	1	*Nipple, Close (1/8" x 3/4")
7	502-0055	1	*Elbow - 90° (1/8")
8	193-0244	1	*Sender, Oil Pressure (E1)
9	502-0046	1	#Nipple, Close (1/8" x 3/4")
10	502-0051	1	#Coupling (1/8")
11	502-0053	1	#Elbow, Street - 45° (1/8")
12	193-0367	1	#Gauge, Oil Pressure - Mechanical

* - Parts Used on Sets With Control Mounted DC Gauges.
# - Not Used on All Models

Ballast Resistor
(Glow Plugs - 24 and 32 Volt DC)

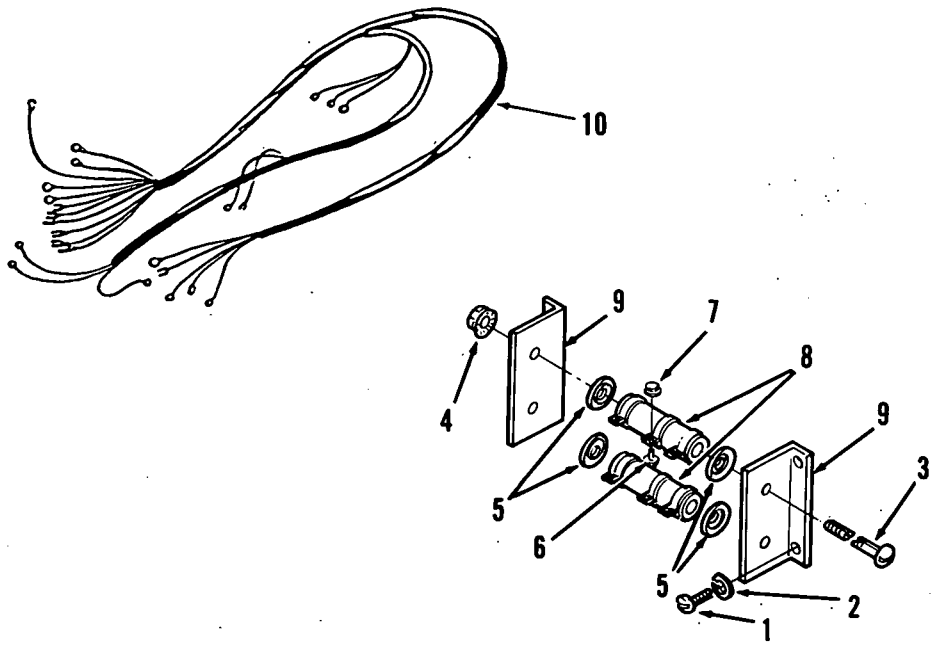

REF NO.	PART NO.	QTY USED	PART DESCRIPTION
1	718-1017	4	Screw, Cap - Hex Head (M6 x 10mm)
2	850-2006	4	Washer, Lock - Spring (M6)
3	812-0166	2	Screw, Machine - Round Head (1/4-20 x 5")
4	870-0212	2	Nut, Self-locking (1/4-20)
5	304-0006	4	Washer, Centering
6	821-0004	6	Screw, Self-locking (#10-32 x 5/16")
7	870-0131	6	Nut, Self-locking (#10-32)
8			Resistor, Fixed - Glow Plugs (RN1)
	304-0651	2	24 Volt DC
	304-0648	2	32 Volt DC
9	150-1942	2	Bracket, Mounting
10	338-1680	1	Package, Wiring (Resistor Leads)

Generator

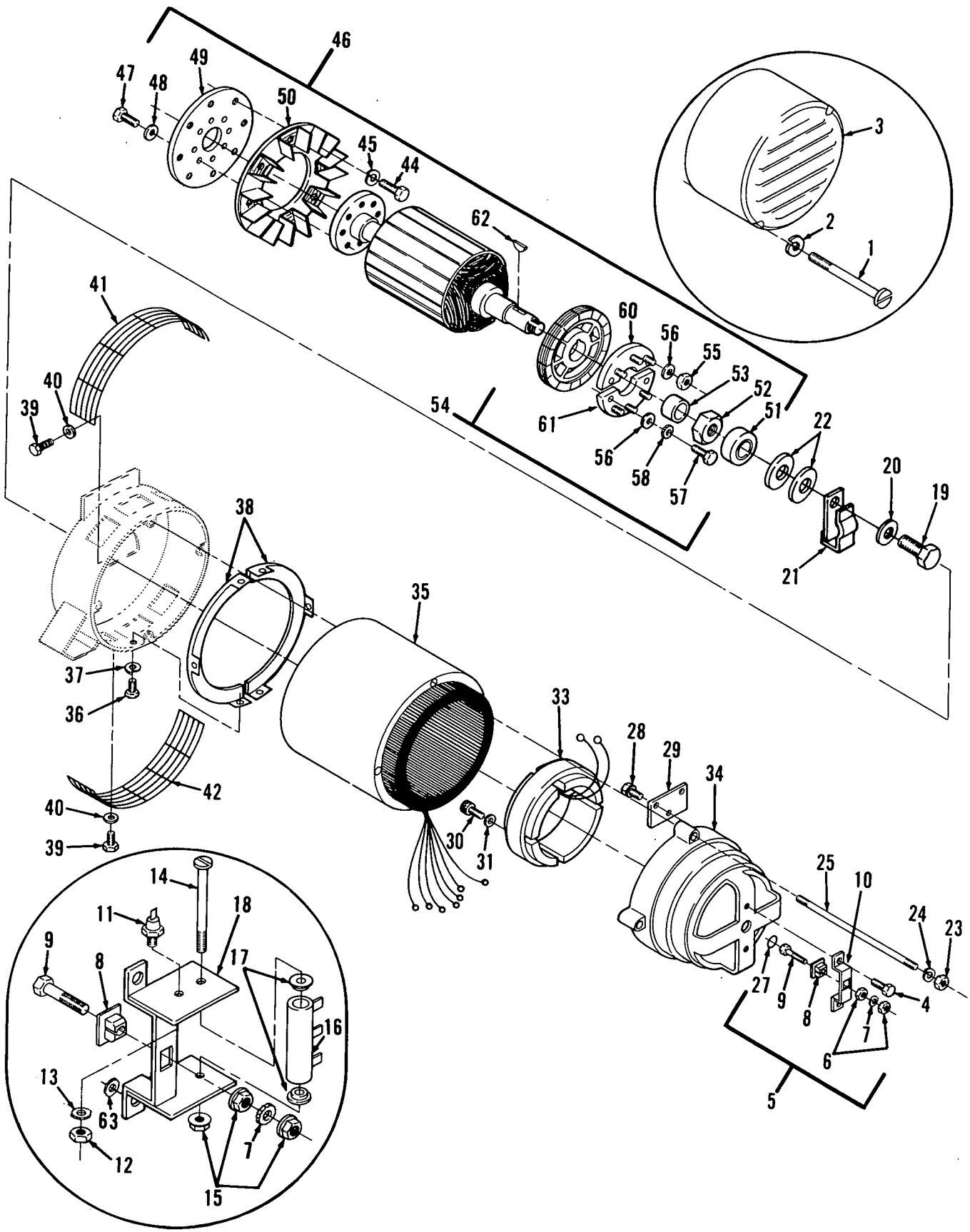
46
47
48
49
50
45
44
62
3
2
1
41
60
56
55
53
52
51
22
20
19
21
40
39
54
61
56
58
57
38
35
37
36
33
28
29
34
42
40
39
30
31
25
10
24
23
27
9
8
4
7
6
5
14
11
18
9
8
17
16
13
63
12
7
15

Generator

REF NO.	PART NO.	QTY USED	PART DESCRIPTION
1	812-0167	2	Screw, Machine - Round Head (1/4-20 x 6")
2	850-0040	2	Washer, Lock - Spring (1/4")
3	234-0498	1	Cover, End Bell
4	821-0010	2	Screw, Self-locking - Hex Washer Head (1/4-20 x 1/2")
5	150-1446	1	Bracket and Point Assembly (32 Volt DC Sets) (Includes Parts Marked @)
6	862-0001	2	@Nut, Hex (1/4-20) 32 Volt DC Sets
7	853-0013	1	#@Washer, Lock - ET (1/4")
8	870-0250	1	#@Nut, Insulating
9	150-0723	1	#@Point, Contact
10	150-1445	1	@Bracket, Mounting - Point Assembly (32 Volt DC Sets)
11	358-0012	1	#Diode, Rectifier
12	868-0001	1	#Nut, Hex - Jam (1/4-28)
13	853-0013	1	#Washer, Lock - ET (1/4")
14	812-0166	1	#Screw, Machine - Round Head (1/4-20 x 5")
15	870-0212	3	#Nut, Self-locking - Hex Washer Head (1/4-20)
16			#Resistor
	304-0649	1	12 Volt DC Sets
	304-0650	1	24 Volt DC Sets
17	304-0006	2	#Washer, Centering
18	150-1938	1	#Bracket, Point and Resistor Mounting
19	800-0051	1	Screw, Cap - Hex Head (3/8-16 x 1-1/4")
20	856-0010	1	Washer, Lock - EIT (3/8")
21	150-0717	1	Switch, Overspeed
22	526-0077	2	Washer, Flat (13/32" ID x 1-1/4" OD x 1/4" Thk)
23	862-0003	4	Nut, Hex (3/8-16)
24	850-0050	4	Washer, Lock - Spring (3/8")
25			Stud
	520-0800	4	Single Phase Sets
			Three Phase Sets
	520-0799	4	Standard
	520-0800	4	Extended Stack - Code L,18
27	509-0094	1	Seal, O-Ring
28	815-0194	2	Screw, Tapping - Hex Head with ET Lockwasher (#10-32 x 3/8")
29	232-2418	1	Board, Terminal
30	802-0040	4	Screw, Cap - Socket Head (1/4-20 x 2")
31	850-0040	4	Washer, Lock - ET (1/4")
33			Stator, Exciter
	220-2010	1	Standard
	220-2309	1	Environmentally Protected
34	211-0256	1	Bell, End
35			Stator, Generator
			50 Hertz Sets
	220-3780	1	Code P,53C - 12 Volt DC
	220-3781	1	Code P,53C - 24 Volt DC
	220-3800	1	Code Z,518R - 12 Volt DC
	220-3801	1	Code Z,518R - 24 Volt DC
			60 Hertz Sets
	220-3778	1	Code J,3C - 12 Volt DC
	220-3779	1	Code J,3C - 24 Volt DC
	220-3792	1	Code J,3C - 32 Volt DC
	220-3798	1	Code G,4XR - 12 Volt DC
	220-3797	1	Code L,18R - 12 Volt DC - Standard
	220-3872	1	Code L,18R - 12 Volt DC - Extended Stack
	220-3798	1	Code L,18R - 24 Volt DC
36	800-2034	6	Screw, Cap - Hex Head (M6 x 20mm)
37	850-2006	6	Washer, Lock - Spring (M6)
38	234-0688	2	Baffle, Air
39	800-2029	8	Screw, Cap - Hex Head (M6 x 12mm)
40	526-2080	8	Washer, Flat (M6)
41	234-0689	1	Guard, Fan - Upper
42	234-0770	1	Guard, Fan - Lower
44	800-2085	8	Bolt, Hex Head (M10 x 20mm)
45	850-2010	8	Washer, Lock - Spring (M10)
46			Rotor Assembly, Generator (Includes Parts Marked *)
	201-3051	1	Single Phase Sets
			Three Phase Sets
	201-3058	1	Standard
	201-3051	1	Extended Stack - Code L,18
47	805-0025	8	*Bolt, Hex Head - Slotted - Grade 8 (7/16-14 x 3/4")
48	526-0249	8	*Washer, Flat - Hardened (15/32" ID x 1" OD x 1/8" Thk)
49	232-2921	1	*Disk, Drive
50	205-0145	1	*Fan, Generator
51	510-0112	1	*Bearing, Ball
52	870-0284	1	*Nut, Self-locking - Hex (1-1/8-12)
53	232-2398	1	*Spacer, Bearing
54			Rotor Assembly, Exciter (Includes Parts Marked †)
	201-2152	1	* Standard
	201-2298	1	Environmentally Protected
55	870-0131	8	†Nut, Self-locking - Hex with ET Lockwasher (#10-32)
56	526-0008	12	†Washer, Flat (#10)
57	813-0100	4	†Screw, Machine - Round Head (#10-32 x 1/2")
58	853-0008	4	†Washer, Lock - ET (#10)
60	358-0069	1	†Rectifier Assembly - Positive
61	358-0070	1	†Rectifier Assembly - Negative
62	515-0094	1	*Key - Exciter Rotor
63	856-0006	2	Washer, Lock - EIT (1/4")

@ - Parts Included in 150-1446 Bracket and Point Assembly.
# - 12 and 24 Volt DC Sets
* - Parts Included in Generator Rotor Assemblies.
† - Parts Included in Exciter Rotor Assemblies.

Control

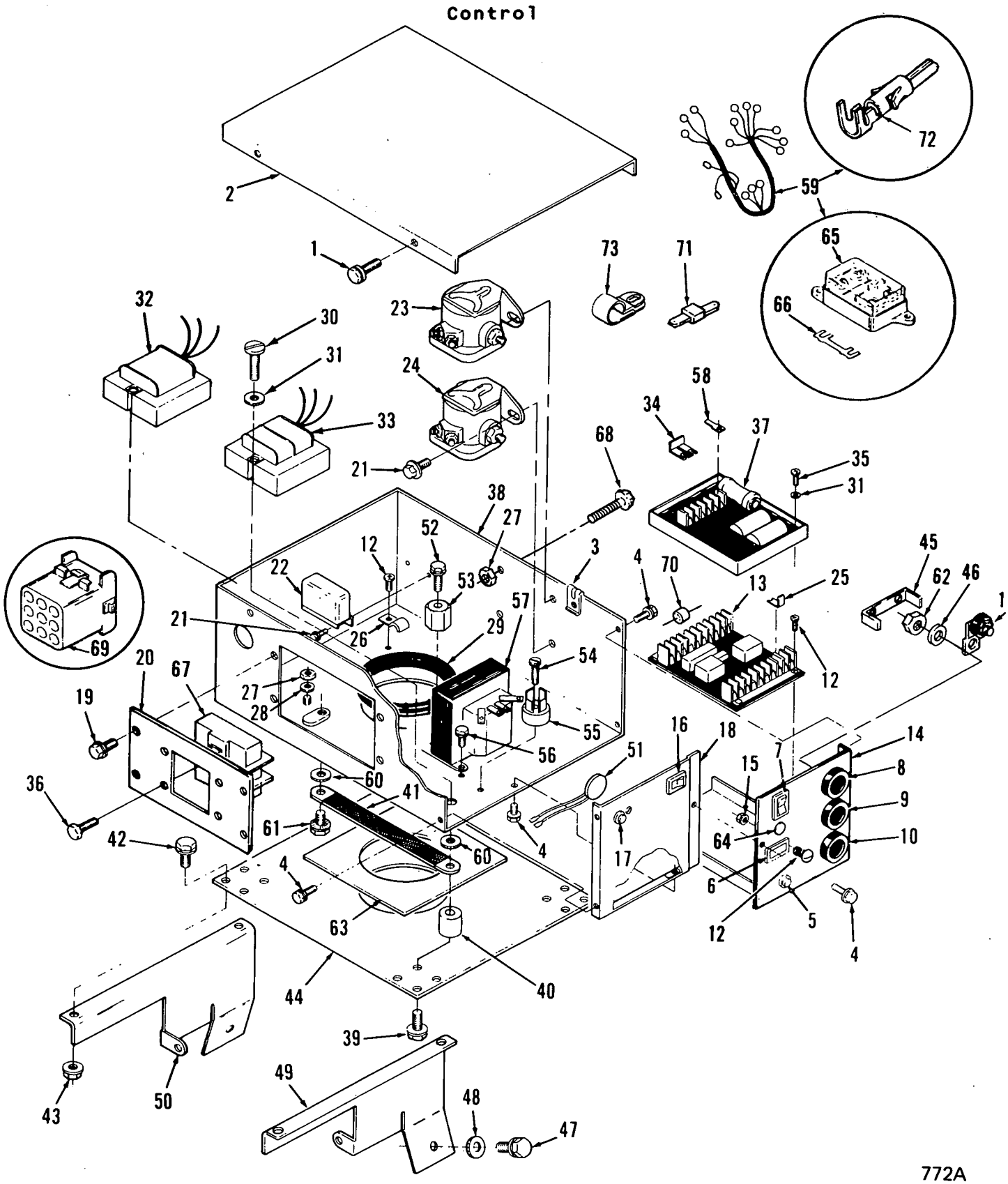

772A

Control

REF NO.	PART NO.	QTY USED	PART DESCRIPTION
1	821-0005	4	Screw, Self-locking - Hex Washer Head (#10-32 x 1/2")
2	301-7983	1	Cover, Control
3	870-0398	4	Nut, Retaining (#10-32)
4	821-0004	5	Screw, Self-locking - Hex Washer Head (#10-32 x 5/16")
5	320-1139	1	Breaker, Circuit (CB12)
6	302-0885	1	Meter, Time Totalizing (M11)
7	308-0739	1	Switch, Rocker (S11)
8			*Gauge, Oil Pressure (M12)
	193-0352	1	12 Volt DC
	193-0352	1	24 Volt DC with Gauge Resistor
9			*Gauge, Coolant Temperature (M13)
	193-0351	1	12 Volt DC
	193-0351	1	24 Volt DC with Gauge Resistor
10			*Voltmeter (M14)
	302-1641	1	12 Volt DC
	302-1642	1	24 Volt DC
11	193-0250	2	*Resistor, Gauge (24 Volt DC Oil Pressure and Coolant Temperature Gauges)
12	815-0544	7	Screw, Machine - Round Head - Cross Recessed with IT Lockwasher (#6-32 x 1/2")
13			Monitor, Engine (A11)
	300-2604	1	12 Volt DC
	300-2605	1	24 Volt DC
	300-2606	1	32 Volt DC
14			Face, Control - With Tray Controls Without DC Gauges
	301-7701	1	Spec A
	301-9491	1	Begin Spec B
	301-9492	1	* Controls With DC Gauges
15	870-0183	2	Nut, Hex - With ET Lockwasher (#6-32)
16	320-1140	1	Breaker, Circuit (CB11)
17	320-1121	1	#Breaker, Circuit (CB21)
18			Face, Control
	301-7951	1	+ Controls Without Switching Voltage Regulator
	301-7694	1	# Controls With Switching Voltage Regulator
19	821-0004	4	Screw, Self-locking - Hex Washer Head (#10-32 x 5/16")
20			Plate, Cover - Access
	301-7684	1	Controls Without Breakers
	301-7944	1	Controls With Two-Pole Breakers
	301-7943	1	Controls With Three-Pole Breakers
21	821-0008	6	Screw, Cap - Hex Washer Head (1/4-20 x 5/16")
22			Regulator, Voltage (K16)
	305-0383	1	12 Volt DC
	305-0700	1	24 Volt DC
23			Relay, Solenoid - Pilot (K11)
	307-1166	1	12 Volt DC
	307-2169	1	24 Volt DC
	307-2170	1	32 Volt DC
24			Relay, Solenoid - Heater (K13)
	307-1031	1	12 Volt DC
	307-2167	1	24 Volt DC
	307-2168	1	32 Volt DC
25	332-1564	2	Terminal, Tab
26	518-0437	1	Clip, Holddown
27	871-0016	4	Nut, Hex - Brass (1/4-20) Ground
28	853-0013	2	Washer, Lock - ET (1/4") Ground
29	508-0115	1	Grommet - 2-1/2" Hole
30	812-0071	4	#Screw, Machine - Round Head (#6-32 x 1-1/2")
31	853-0003	8	#Washer, Lock - ET (#6)
32	315-0386	1	#Transformer, Voltage (T21)
33	315-0391	1	#Reactor (L21)
34	332-2605	1	#Jumper
35	812-0070	4	#Screw, Machine - Round Head (#6-32 x 1-1/4")
36	812-0063	6	#Screw, Machine - Round Head (#6-32 x 1/2")
37	305-0688	1	#Regulator, Switching Voltage (VR21)
38	301-7807	1	Box, Control
39	821-0014	4	Screw, Locking Head - Flange (5/16-18 x 1/2")
40	402-0527	4	Dampener, Vibration
41	337-0049	1	Strap, Ground - Control
42	821-0010	4	Screw, Self-locking - Hex Washer Head (1/4-20 x 1/2")
43	870-0212	4	Nut, Self-locking - Hex Washer Head (1/4-20)
44	301-7685	1	Plate, Mounting - Control
45	302-0270	3	*Clamp, Gauge Mounting
46	526-0049	9	*Washer, Flat (#10)
47	815-0236	2	Screw, Tapping - Hex Head (5/16-18 x 5/8")
48	856-1008	2	Washer, Lock - EIT (5/16")
49	301-7700	1	Bracket, Mounting - Right Hand
50	301-7699	1	Bracket, Mounting - Left Hand
51	305-0703	1	+Suppressor, Voltage (RV21)
52	821-0004	4	+Screw, Self-locking - Hex Washer Head (1/4-20 x 5/16")
53	332-2370	2	+Standoff, Insulator (TB1,TB2)
54	815-0346	1	+Screw, Machine - Round Head - Brass with ET Lockwasher (#10-32 x 5/8")
55	305-0696	1	+Bridge, Rectifier (CR21)
56	821-0004	4	+Screw, Self-locking - Hex Washer Head (#10-32 x 5/16")
57			+Transformer, Voltage Regulating (T21)
	315-0553	1	50 Hertz Sets
	315-0552	1	60 Hertz Sets
58	332-2617	2	#Terminal, Tab

* - Parts Used on Controls with DC Gauges
\# - Parts Used on Controls with Switching Voltage Regulator
\+ - Parts Used on Controls without Switching Voltage Regulator

Control

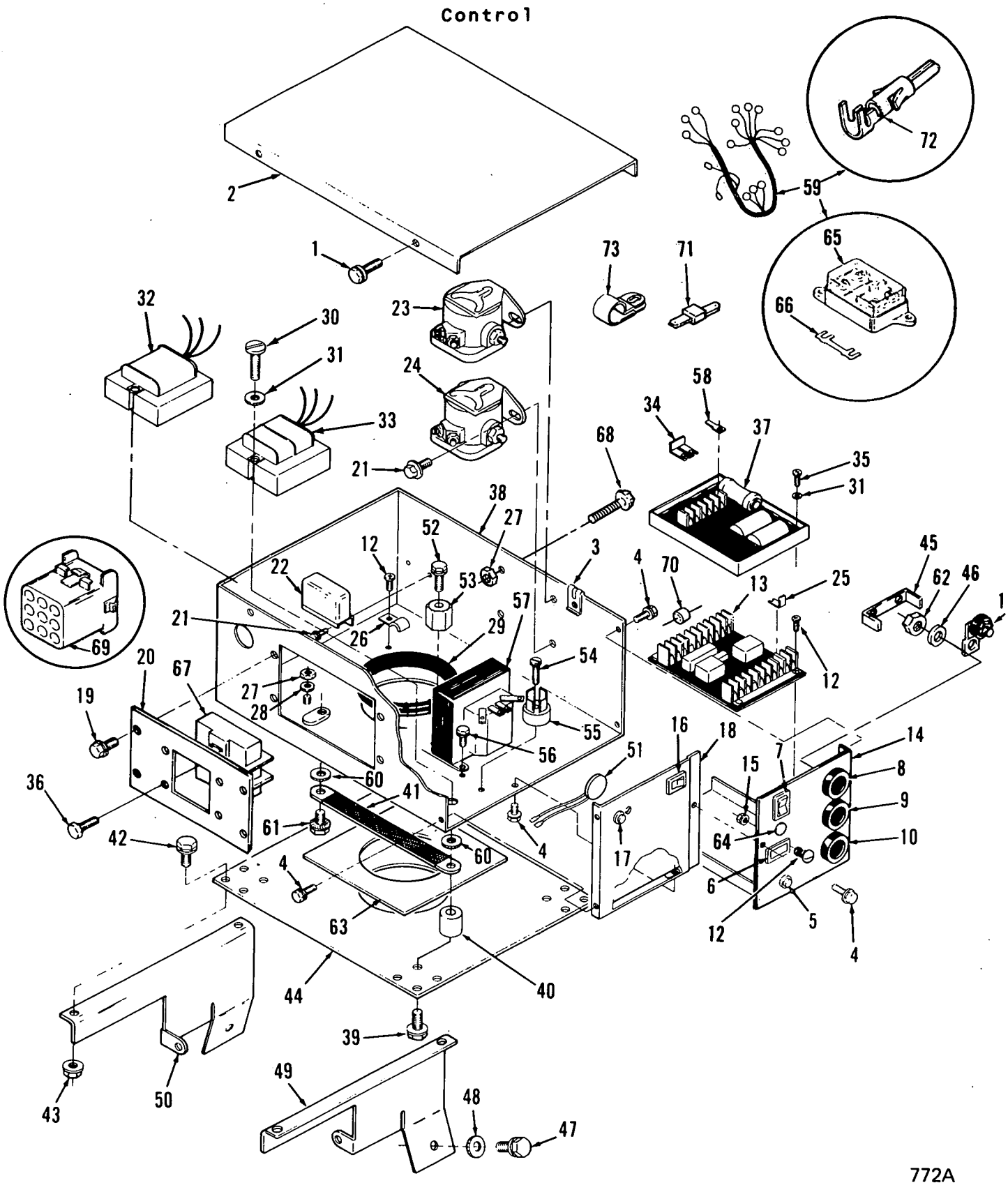

772A

Control

REF NO.	PART NO.	QTY USED		PART DESCRIPTION
59				Harness, Wiring
	338-1679	1	#	Voltage Regulator Assembly to Circuit Breaker, Engine Monitor and Exciter Field
	338-1678	1	+	Rectifier Bridge to Exciter Field and Transformer
				Control Box
				Spec A
	338-1675-02	1		Controls Without DC Gauges (12 and 24 Volt DC)
	338-1675-01	1		Controls Without DC Gauges (32 Volt DC)
	338-1675-03	1	*	Controls With DC Gauges (12 and 24 Volt DC)
				Begin Spec B
				Controls Without DC Gauges (12 and 24 Volt DC)
	338-1949-02	1		Sets Without Preheat
	338-2363-02	1		Sets With Preheat (Includes Parts Marked >)
				Controls Without DC Gauges (32 Volt DC)
	338-1949-01	1		Sets Without Preheat
	338-2363-01	1		Sets With Preheat (Includes Parts Marked >)
			*	Controls With DC Gauges (12 and 24 Volt DC)
	338-1949-03	1		Sets Without Preheat
	338-2363-03	1		Sets With Preheat (Includes Parts Marked >)
				Engine to Control
				Spec A (Includes Parts Marked §)
	338-1674-02	1		Controls Without DC Gauges (12 and 24 Volt DC)
	338-1674-01	1		Controls Without DC Gauges (32 Volt DC)
	338-1674-03	1	*	Controls With DC Gauges (12 and 24 Volt DC)
				Begin Spec B
	338-1950-02	1		Controls Without DC Gauges (12 and 24 Volt DC)
	338-1950-01	1		Controls Without DC Gauges (32 Volt DC)
	338-1950-03	1	*	Controls With DC Gauges (12 and 24 Volt DC)

REF NO.	PART NO.	QTY USED	PART DESCRIPTION
60	856-0008	2	Washer, Lock - EIT (5/16")
61	821-0014	1	Screw, Locking Head - Flange (5/16-18 x 1/2")
62	871-0010	9	*Nut, Hex - Brass (#10-32)
63	405-3156	2	Insulation
64	320-0548	1	Breaker, Circuit (CB13)
			Begin Spec B
65	321-0263	1	§Holder, Fuse - Spec A
66	321-0262-02	1	§Fuse, Strip - 50 Amp (F1)
			Spec A
67			Breaker, Circuit (CB22)
			Single Phase Sets
	320-1423	1	70 Amp, 240 Volt AC
	320-1210	1	85 Amp, 240 Volt AC
	320-1207	1	100 Amp, 240 Volt AC
			Three Phase Sets
	320-1426	1	35 Amp, 240 Volt AC
	320-1209	1	60 Amp, 240 Volt AC
	320-1208	1	70 Amp, 240 Volt AC
68	821-0012	2	Screw, Self-locking - Hex Flange Head (1/4-20 x 1-1/8") Ground
69	323-1325	1	Cap, Connector - 9 Place - Control Box Wiring Harness - Sets With Preheat (J3)
70	357-0050	1	Rectifier - Sets With Preheat (CR2)
71	357-0030	1	Rectifier - Sets With Preheat (CR3)
72	323-1200	6	>Socket, Contact
73	332-1356	3	Clamp, Loop - Insulated (Wiring Harness)

* - Parts Used on Controls With DC Gauges.
\# - Parts Used on Controls With Switching Voltage Regulator.
\+ - Parts Used on Controls Without Switching Voltage Regulator.
§ - Parts Included in Engine to Control Wiring Harness for Spec A.
\> - Parts Included in 338-2363-01, -02 and -03 Wiring Harnesses.

Standard Remote Control Panel Kit

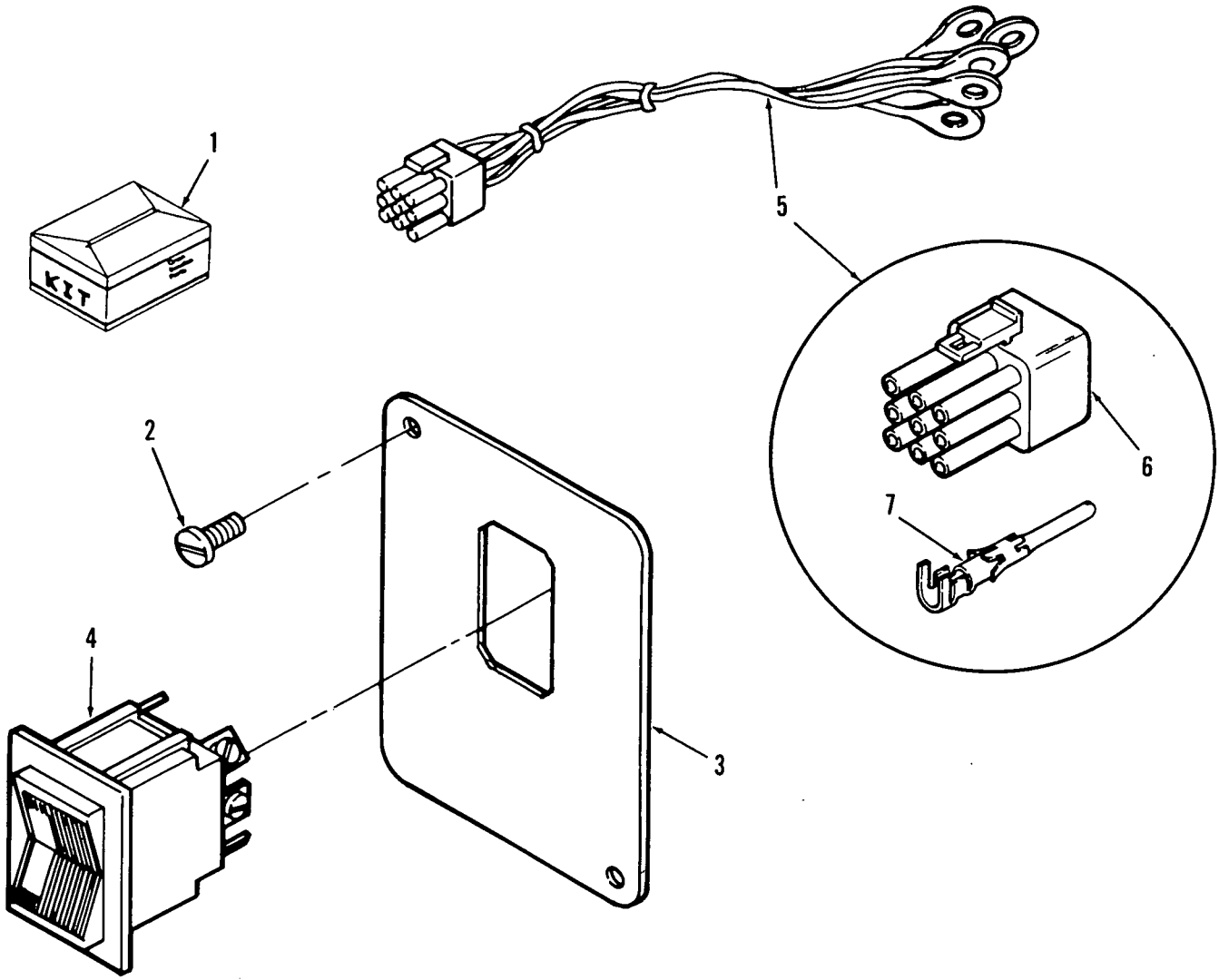

REF NO.	PART NO.	QTY USED	PART DESCRIPTION
1	-	1	Kit, Panel - Remote Control - Standard (With Provision for Preheat) (Includes Parts Marked *) (Part number not available at time of printing)
2	808-0023	2	*Screw, Sheet Metal - Round Head (#8 x 1/2")
3	319-0491	1	*Panel (Without Decals)
	98-5948	1	* Decal - Front
	98-5945	1	* Decal - Rear
4	308-0827	1	*Switch, Rocker (S11)
5	338-2362-01	1	*Harness, Wiring (6") (Includes Parts Marked #)
6	323-1291	1	#Housing, Connector (9 Place) (P4)
7	323-1199	5	#Pin, Contact

* - Parts Included in - Remote Control Panel Kit.

- Parts Included in 338-2362-01 Wiring Harness.

Deluxe Remote Control Panel Kit

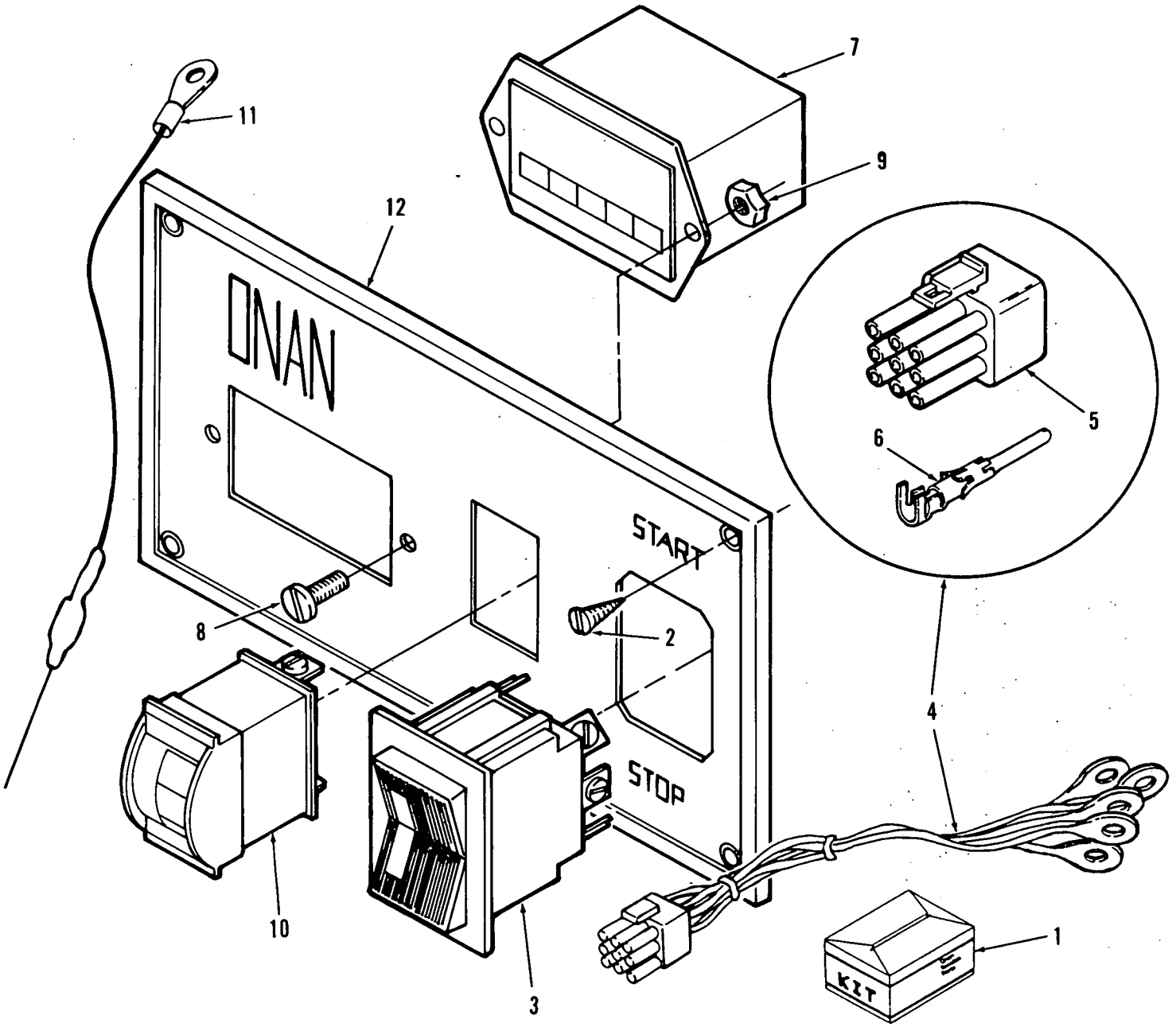

REF NO.	PART NO.	QTY USED	PART DESCRIPTION
1	-	1	Kit, Panel - Remote Control - Deluxe (With Provision for Preheat) (Includes Parts Marked *) (Part number not available at time of printing)
2	808-0023	4	*Screw, Sheet Metal - Round Head (#8 x 1/2")
3	308-0827	1	*Switch, Rocker
4	338-2362-01	1	*Harness, Wiring (6") (Includes Parts Marked #)
5	323-1291	1	#Housing, Connector (9 Place) (P4)
6	323-1199	5	#Pin, Contact
7	302-0885	1	*Meter, Time Totalizing (M11)
8	815-0385	2	*Screw, Machine - Round Head (#6-32 x 1/2")
9	870-0183	2	*Nut, Hex - With ET (#6-32)
10	302-0888	1	*Meter, Battery Condition
11	359-0034	1	*Diode
12	319-0492	1	*Panel (Without Decals)
	98-5947	1	* Decal - Front
	98-5944	1	* Decal - Rear

* - Parts Included in - Remote Control Panel Kit.

- Parts Included in 338-2362-01 Wiring Harness.

Remote Control DC Gauge Panel Kit

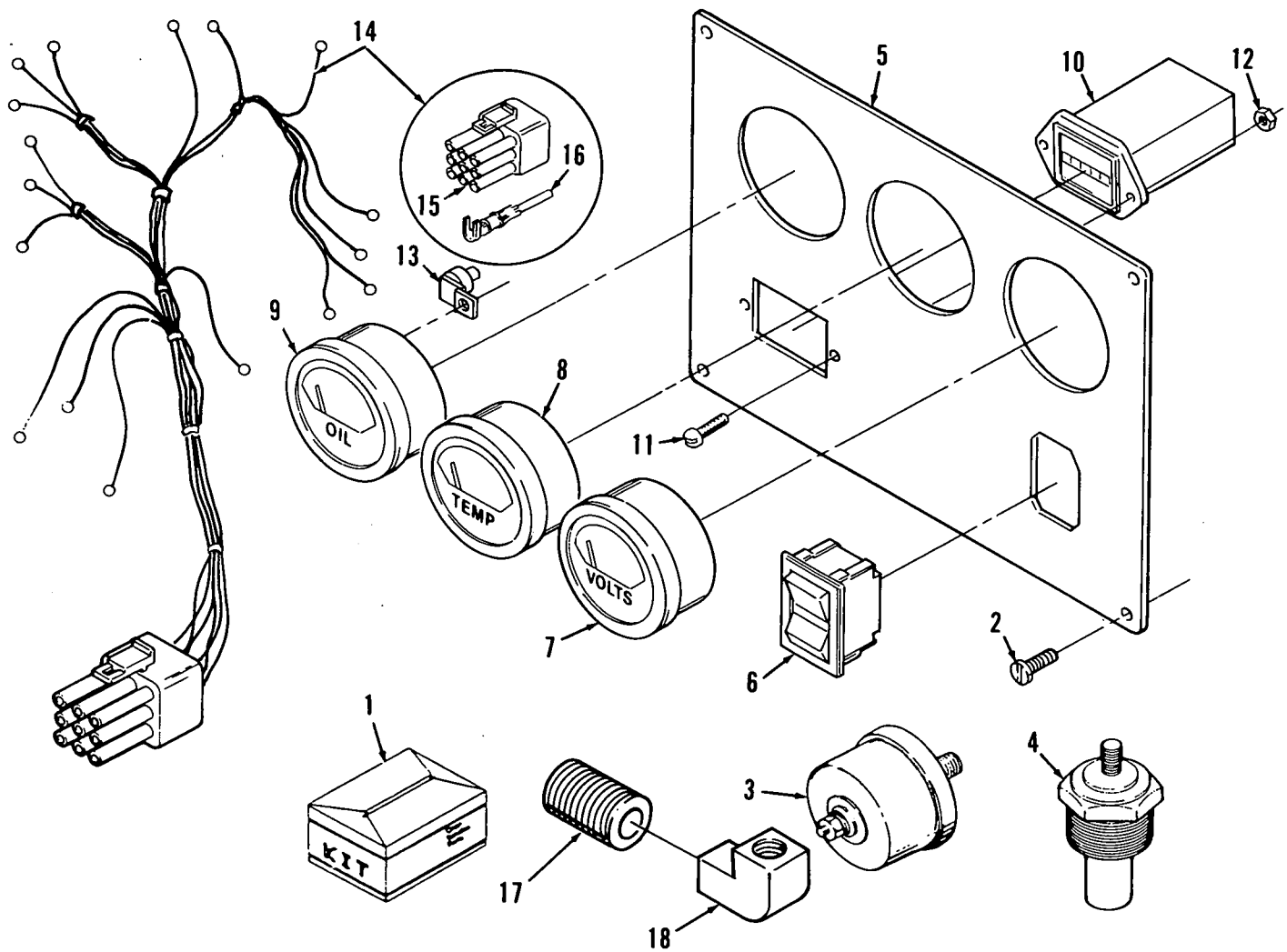

REF NO.	PART NO.	QTY USED	PART DESCRIPTION
1			Kit, Gauge Panel - Remote Control (Includes Parts Listed Below)
	300-3262	1	12 Volt DC
	300-3263	1	24 Volt DC
2	808-0023	4	Screw, Sheet Metal - Round Head (#8 x 1/2")
3	193-0244	1	Sender, Oil Pressure (E1)
4	193-0318	1	Sender, Water Temperature (E2)
5	319-0141	1	Panel (Without Decals)
	98-5803	1	Decal - Front
	98-5761	1	Decal - Rear
6	308-0827	1	Switch, Rocker (S11)
7			Voltmeter (Includes Mounting Hardware) (M14)
	302-1641	1	12 Volt DC
	302-1642	1	24 Volt DC
8	193-0351	1	Gauge, Coolant Temperature (Includes Mounting Hardware) (M13)
9	193-0352	1	Gauge, Oil Pressure (Includes Mounting Hardware) (M12)
10	302-0885	1	Meter, Time Totalizing (M11)
11	815-0385	2	Screw, Machine - Round Head (#6-32 x 1/2")
12	870-0183	2	Nut, Hex - With ET (#6-32)
13	193-0250	2	Resistor (Mounted on water temperature and oil pressure gauges with 24 Volt DC application) (R11,R12)
14	338-2222-01	1	Harness, Wiring - Control Panel (Includes Housing and Pins)
15	323-1291	1	Housing, Connector (P4)
16	323-1199	7	Pin, Contact
17	502-0046	1	Nipple, Close (1/8" x 3/4")
18	502-0055	1	Elbow - 90° (1/8")

Remote Wiring Harness
(Generator Set to Remote Control)

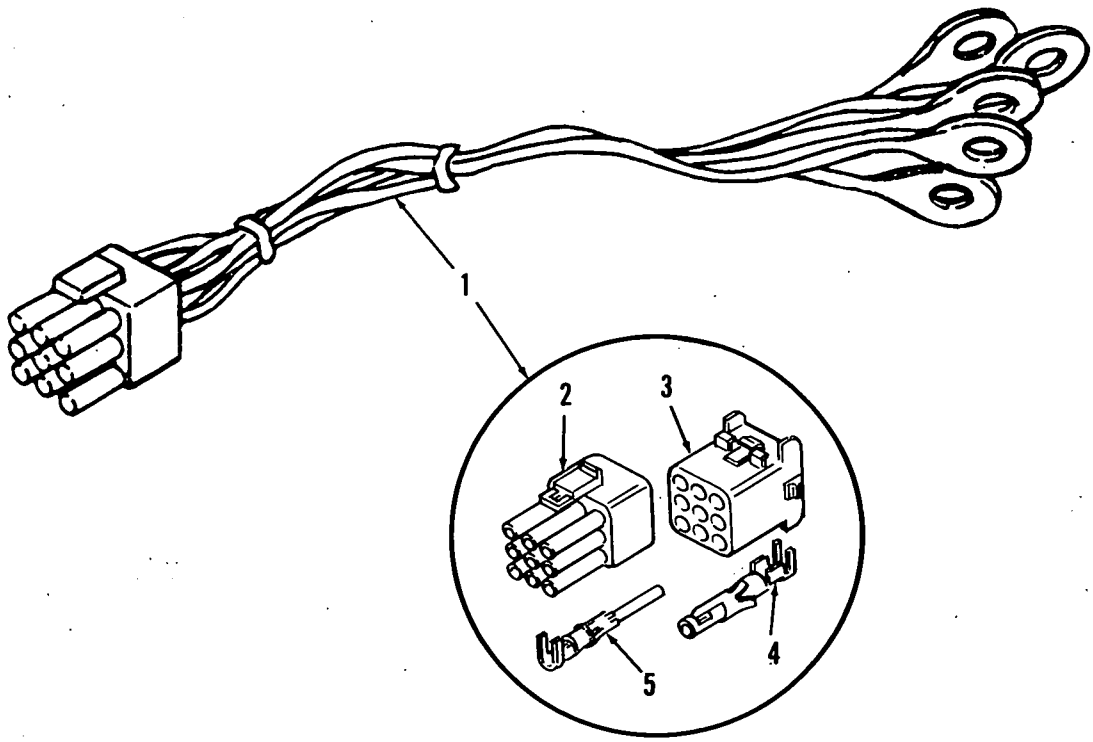

REF NO.	PART NO.	QTY USED	PART DESCRIPTION
1			Harness, Wiring - Remote Control (Includes Parts Listed Below)
	338-2237	1	15' Long
	338-2238	1	25' Long
	338-2354	1	45' Long

REF NO.	PART NO.	QTY USED	PART DESCRIPTION
2	323-1291	1	Housing, Connector
3	323-1325	1	Housing, Connector
4	323-1200	8	Socket, Contact
5	323-1199	8	Pin, Contact

Paint, Thread Sealant and Miscellaneous Kits

REF NO.	PART NO.	QTY USED		PART DESCRIPTION
				Paint, Touch Up (Enamel) - 13 oz. Pressurized Spray Can)
	525-0494	-		Off White
	525-0529	-		Brilliant White
	518-0452	-		Sealant, Thread (50cc Bottle)
				Kit, DC Gauge - Generator Set Control (Field Installation Kit)
	300-3006	1		12 Volt DC
	300-3007	1		24 Volt DC
	168-0170	1		Kit, Gasket - Lower End (Includes Indented Parts Listed Below)
	101-0600	1		Gasket, Rear Seal Plate
	102-0973	1		Gasket, Oil Cooler Plate
	102-0975	1		Gasket, Oil Cooler Cover
	102-0981	1		Gasket, Oil Pan
	102-1046	1		Gasket, Drain Plug (12mm)
	102-1147	1		Gasket, Drain Plug (18mm)
	103-0733	1		Gasket, Backplate
	103-0731	1	*	Gasket, Gearcase
	120-0917	1		Gasket, Oil Intake
	122-0635	1		Gasket, Oil Filter Adapter
	509-0171	1		Sleeve, Wear
	149-1728	1		Gasket, Fuel Pump
	509-0170	1		Seal, Gearcase
	509-0203	1		Seal, Rear
	509-0263	1		Seal, "O" Ring - Injection Pump Cover
	509-0265	1		Seal, "O" Ring - Injection Pump
	103-0723	1	*	Gasket, Gearcase
	101-0711	1	*	Gasket, Bearing Support
	509-0175	1	*	Seal, "O" Ring
	121-0039	1	*	Gasket, Adapter
	509-0142	1	*	Seal, "O" Ring
	168-0159	1		Kit, Gasket - Valve Grind (Includes Indented Parts Listed Below)
	110-3012	1		Gasket, Cylinder Head
	110-3228	8		Seal, Valve Stem
	115-0232	4		Gasket, Rocker Cover Nut
	115-0254	1		Gasket, Rocker Cover
	131-0294	2	*	Gasket, Water Pump Mounting
	154-2162	4		Gasket, Exhaust Manifold
	154-2261	1		Gasket, Intake Manifold
	154-2325	1	*	Gasket, Exhaust Manifold
	509-0264	1		Seal, "O" Ring (Water Pump)
	147-0436	4		Seal, Injector
	123-1518	1		Gasket, Oil Fill Cap
	309-0424	1	*	Gasket, Thermostat (Dual)
	131-0335	1	*	Gasket, Water Pump
	155-1920	1	*	Gasket, Exhaust
	309-0417	1	*	Gasket, Thermostat (Single)
	131-0334	1	*	Gasket, Water Pump
	131-0391	1	*	Gasket, Water Pump
	131-0389	1	*	Gasket, Water Pump
	131-0408	1	*	Gasket, Water Pump
	131-0409	1	*	Gasket, Water Pump

* - Not used in all applications.

Numerical Index

Part No.	Page	Part No.	Page	Part No.	Page	Part No.	Page
98-5761	46	104-1171	24	114-0313	5	130-2140	22
98-5803	46	104-1462	24	114-0315	5	130-2147	19
98-5944	45	104-1472	21	114-0316	5	130-2201	30
98-5945	44	104-1508	5	114-0318	5	130-2202	30
98-5947	45	105-0508	8	114-0319	5	130-2242	22
98-5948	44	105-0513	8	114-0319-01	5	130-2248	19
101-0471	5	105-0515	5	114-0319-02	5	130-2259	22
101-0511	5	105-0517	5	114-0319-03	5	130-2292	22
101-0600	5	105-0519	8	115-0202	7	130-2304	19
101-0600	48	105-0534	5	115-0204	7	130-3007	30
101-0677	5	110-2752	7	115-0232	17	130-3008	30
101-0678	5	110-2781-01	7	115-0232	48	130-3023	19
101-0679	5	110-2781-02	7	115-0253	7	131-0294	21
101-0680	5	110-2781-03	7	115-0254	17	131-0294	48
101-0681	5	110-2839	7	115-0254	48	131-0324	21
101-0682	5	110-2840	7	115-0270	7	131-0334	21
101-0683	5	110-2978	5	115-0275	5	131-0334	48
101-0684	5	110-2979	7	115-0313	7	131-0335	48
101-0685	5	110-2991	7	115-0315	7	131-0341	21
101-0686	5	110-3012	7	115-0316	7	131-0342	22
101-0687	5	110-3012	48	115-0320	17	131-0350	21
101-0688	5	110-3015	7	115-0345	17	131-0389	48
101-0689	5	110-3045	7	120-0885	8	131-0391	48
101-0690	5	110-3066	7	120-0917	13	131-0408	48
101-0691	5	110-3137	7	120-0917	48	131-0409	48
101-0692	5	110-3201	7	120-0919	7	132-0275	22
101-0711	48	110-3226-01	7	120-0979	8	132-0276	22
101-0713	5	110-3226-02	7	120-0983	8	132-0293	22
102-0973	48	110-3226-03	7	120-1008	13	132-0294	22
102-0975	48	110-3228	7	120-1015	8	132-0317	22
102-0981	13	110-3228	48	120-1041	8	132-0328	22
102-0981	48	110-3245	7	120-1063	8	132-0329	22
102-1046	48	110-3285	7	121-0039	48	140-1848	29
102-1147	48	110-3290	5	122-0550	14	140-1857	29
102-1188	13	110-3300	7	122-0592	14	140-1879	33
102-1198	15	110-3432	7	122-0635	14	147-0427	8
102-1235	15	110-3490	7	122-0635	48	147-0436	9
102-1237	13	110-3495	7	123-1439	13	147-0436	48
102-1237	15	110-3496	7	123-1511	5	147-0462-05	9
103-0716	8	112-0165	5	123-1514	5	147-0462-05	10
103-0723	48	112-0201	5	123-1518	17	147-0462-06	9
103-0731	8	112-0202	5	123-1518	48	147-0462-06	10
103-0731	48	112-0203	5	123-1536	7	147-0462-09	9
103-0733	8	112-0204	5	123-1558	17	147-0462-09	10
103-0733	48	112-0205	5	123-1605	17	147-0462-10	9
103-0735	8	113-0233	5	123-1647	17	147-0462-10	10
103-0746	8	113-0234	5	130-1107	11	147-0462-11	9
103-0750	8	113-0235	5	130-2091	19	147-0462-11	10
104-1138	5	113-0236	5	130-2116	19	147-0462-12	9
104-1169	24	113-0237	5	130-2130	19	147-0462-12	10

Numerical Index

Part No.	Page	Part No.	Page	Part No.	Page	Part No.	Page
147-0578	10	147-0677	9	154-2350	19	191-1438	26
147-0579	10	147-0678	9	154-2352	19	191-1439	26
147-0580	10	147-0679	9	154-2353	19	191-1440	26
147-0581	10	147-0680	9	154-2373	20	191-1441	26
147-0582	10	147-0700	9	154-2409	20	191-1442	26
147-0583	10	147-0703	10	154-2431	19	191-1443	26
147-0584	10	147-0704	10	154-2460	17	191-1444	26
147-0585	10	147-0765	9	154-2668	19	191-1445	26
147-0586	10	147-0766	9	155-1002	34	191-1446	26
147-0587	10	147-0767	9	155-1920	48	191-1449	26
147-0588	10	147-0779	11	155-2010	34	191-1450	26
147-0589	10	147-0780	9	155-2014	34	191-1550	25
147-0590	10	149-1728	12	155-2017	34	191-1550	26
147-0591	10	149-1728	48	160-1292	23	191-1605	26
147-0592	10	149-1732	12	168-0159	48	191-1606	26
147-0593	10	149-1758	12	168-0170	5	191-1607	26
147-0617	9	149-1759	12	168-0170	48	191-1608	26
147-0618	9	149-1771	12	168-0172	19	191-1609	26
147-0619	9	149-1772	12	191-0828	25	193-0244	35
147-0620	9	149-1793	12	191-0828	27	193-0244	46
147-0621	9	149-1800	12	191-1121	27	193-0250	41
147-0622	9	149-1834	12	191-1122	27	193-0250	46
147-0623	9	149-2067	12	191-1123	27	193-0318	21
147-0624	9	150-0717	39	191-1124	27	193-0318	46
147-0625	9	150-0723	39	191-1125	27	193-0322	21
147-0626	9	150-0939	11	191-1126	27	193-0351	41
147-0627	9	150-1445	39	191-1127	27	193-0351	46
147-0628	9	150-1446	39	191-1128	27	193-0352	41
147-0629	9	150-1923	11	191-1130	27	193-0352	46
147-0630	9	150-1938	39	191-1132	27	193-0367	35
147-0631	9	150-1942	37	191-1133	27	201-2152	39
147-0632	9	150-1996	11	191-1134	27	201-2298	39
147-0633	9	150-2236	11	191-1135	27	201-3051	39
147-0634	9	150-2239	11	191-1136	27	201-3058	39
147-0635	9	150-2281	11	191-1137	27	205-0145	39
147-0636	9	151-0402	11	191-1139	27	211-0256	39
147-0637	9	151-0437	11	191-1140	27	220-2010	39
147-0638	9	151-0567	11	191-1194	27	220-2309	39
147-0639	9	151-0603-02	11	191-1332	22	220-3778	39
147-0640	9	151-0638	11	191-1394	25	220-3779	39
147-0641	9	151-0639	11	191-1394	26	220-3780	39
147-0642	9	154-2162	19	191-1430	26	220-3781	39
147-0643	9	154-2162	48	191-1431	26	220-3792	39
147-0644	9	154-2261	17	191-1432	26	220-3797	39
147-0645	9	154-2261	48	191-1433	26	220-3798	39
147-0646	9	154-2325	48	191-1434	26	220-3800	39
147-0647	9	154-2346	19	191-1435	26	220-3801	39
147-0664	12	154-2347	19	191-1436	26	220-3872	39
147-0675	9	154-2348	19	191-1437	26	231-0267	23
147-0676	9	154-2349	19			231-0289	23

Numerical Index

Part No.	Page	Part No.	Page	Part No.	Page	Part No.	Page
232-2398	39	307-2168	41	332-1564	41	405-3130	33
232-2418	39	307-2169	41	332-2370	41	405-3131	33
232-2921	39	307-2170	41	332-2605	41	405-3138	33
234-0498	39	307-2643	11	332-2617	41	405-3140	33
234-0688	39	308-0739	41	333-0220	28	405-3141	33
234-0689	39	308-0827	44	336-4131	28	405-3149	33
234-0770	39	308-0827	45	336-9474	25	405-3155	33
300-2604	41	308-0827	46	337-0049	41	405-3156	43
300-2605	41	309-0104	35	337-1837	31	405-3174	33
300-2606	41	309-0169	35	338-1674-01	43	405-3249	33
300-3006	48	309-0417	20	338-1674-02	43	405-3258	33
300-3007	48	309-0417	48	338-1674-03	43	405-3292	33
300-3262	46	309-0424	48	338-1675-01	43	501-0462	15
300-3263	46	309-0437	21	338-1675-02	43	501-0484	15
301-7684	41	309-0458	21	338-1675-03	43	502-0003	7
301-7685	41	309-0484	20	338-1678	43	502-0020	9
301-7694	41	309-0518	20	338-1679	43	502-0020	35
301-7699	41	315-0386	41	338-1680	37	502-0046	35
301-7700	41	315-0391	41	338-1765-01	11	502-0046	46
301-7701	41	315-0552	41	338-1949-01	43	502-0051	35
301-7807	41	315-0553	41	338-1949-02	43	502-0053	35
301-7943	41	319-0141	46	338-1949-03	43	502-0055	35
301-7944	41	319-0491	44	338-1950-01	43	502-0055	46
301-7951	41	319-0492	45	338-1950-02	43	502-0079	35
301-7983	41	320-0540	11	338-1950-03	43	502-0153	5
301-9491	41	320-0548	43	338-2222-01	46	502-0153	19
301-9492	41	320-1121	41	338-2237	47	502-0254	9
302-0270	41	320-1139	41	338-2238	47	502-0274	5
302-0885	41	320-1140	41	338-2292	11	502-0317	21
302-0885	45	320-1207	43	338-2354	47	502-0733	9
302-0885	46	320-1208	43	338-2362-01	44	502-0768	12
302-0888	45	320-1209	43	338-2362-01	45	502-0769	12
302-1641	41	320-1210	43	338-2363-01	43	502-0773	12
302-1641	46	320-1423	43	338-2363-02	43	502-0774	12
302-1642	41	320-1426	43	338-2363-03	43	502-0775	21
302-1642	46	321-0262-02	43	357-0030	43	502-0836	19
304-0006	37	321-0263	43	357-0050	43	502-0836	22
304-0006	39	323-1199	44	358-0012	39	502-0874	33
304-0648	37	323-1199	45	358-0069	39	502-0876	15
304-0649	39	323-1199	46	358-0070	39	502-0881	19
304-0650	39	323-1199	47	359-0034	45	502-0881	20
304-0651	37	323-1200	43	402-0466	31	502-0881	34
305-0383	41	323-1200	47	402-0503	31	502-0883	34
305-0688	41	323-1291	44	402-0527	41	502-0908	15
305-0696	41	323-1291	45	403-1925	28	503-0189	33
305-0700	41	323-1291	46	403-1932	28	503-0197	13
305-0703	41	323-1291	47	403-2125	31	503-0354	33
307-1031	41	323-1325	43	403-2128	19	503-0354	34
307-1166	41	323-1325	47	403-2140	19	503-0539	19
307-2167	41	332-1356	43	405-1872	33	503-0648	29

Numerical Index

Part No.	Page	Part No.	Page	Part No.	Page	Part No.	Page
503-1123	19	510-0112	39	718-1035	21	740-1008	22
503-1124	19	511-0147-14	21	718-1036	8	740-1008	24
503-1137	19	515-0094	39	718-1036	13	740-1010	8
503-1138	20	515-0245	5	718-1036	22	740-1010	19
503-1138	22	515-0245	5	718-1037	5	740-1010	25
503-1140	19	515-0245	21	718-1037	8	740-1010	28
503-1141	19	516-2102	5	718-1037	22	740-1801	5
503-1165	19	517-0140	5	718-1039	8	740-1801	7
503-1195	13	517-0141	5	718-1041	8	740-1801	23
503-1223	22	517-0142	7	718-1043	8	740-1801	25
503-1224	22	517-0142	19	718-1044	8	740-1802	19
503-1226	33	517-0144	5	718-1044	13	750-1002	28
503-1242	20	517-0146	5	718-1044	21	750-1004	11
503-1258	33	517-0146	7	718-1046	8	750-1006	9
503-1339	33	517-0162	7	718-1048	8	750-1006	22
504-0011	13	517-0167	7	718-1048	20	750-1008	22
504-0028	5	517-0250	5	718-1054	19	750-1010	31
504-0062	34	518-0409	5	718-1064	8	775-0074	5
505-0047	15	518-0437	41	718-1072	31	775-0078	5
505-0050	13	518-0452	48	718-1074	19	775-0089	5
505-0126	15	520-0799	39	718-1074	31	800-0006	11
505-0153	21	520-0800	39	718-1076	31	800-0007	11
505-0185	13	520-2403	9	718-1078	23	800-0051	39
505-0274	14	525-0494	48	718-1086	28	800-2029	30
505-0274	17	525-0529	48	718-1801	17	800-2029	39
505-0306	21	526-0003	20	718-1802	28	800-2034	33
505-0846	22	526-0003	33	720-1044	19	800-2034	39
508-0055	33	526-0008	39	720-1047	20	800-2056	30
508-0115	41	526-0021	33	720-1123	21	800-2059	31
508-0228	7	526-0049	41	720-1801	5	800-2071	11
508-0250	15	526-0077	39	720-1802	7	800-2085	39
508-1026	33	526-0249	39	720-1804	24	800-2100	22
508-1039	34	526-0283	21	720-1806	25	802-0040	39
509-0094	39	526-0322	33	725-1051	14	805-0025	39
509-0142	17	526-2080	39	725-1074	12	806-2001	19
509-0142	48	526-2106	8	725-1801	8	808-0023	44
509-0170	48	526-2106	9	725-1802	8	808-0023	45
509-0171	48	526-2106	22	740-1004	5	808-0023	46
509-0175	48	526-2107	8	740-1004	12	812-0063	41
509-0179	19	526-2108	14	740-1004	19	812-0070	41
509-0190	19	526-2119	7	740-1006	5	812-0071	41
509-0191	8	526-2127	8	740-1006	8	812-0166	37
509-0203	5	541-0214-02	21	740-1006	13	812-0166	39
509-0203	48	718-1002	25	740-1006	17	812-0167	39
509-0263	8	718-1007	11	740-1006	19	813-0100	39
509-0263	48	718-1017	37	740-1006	20	813-0103	11
509-0264	21	718-1021	12	740-1006	21	815-0194	39
509-0264	48	718-1022	19	740-1006	22	815-0236	41
509-0265	10	718-1034	22	740-1008	12	815-0346	41
509-0265	48	718-1035	8	740-1008	19	815-0385	45

Numerical Index

Part No.	Page	Part No.	Page	Part No.	Page	Part No.	Page
815-0385	46	862-0003	39				
815-0544	41	862-0016	33				
815-0547	13	868-0001	39				
815-0562	33	870-0065	11				
815-0573	33	870-0131	11				
815-0578	8	870-0131	37				
815-0612	21	870-0131	39				
816-0248	33	870-0183	41				
818-0150	33	870-0183	45				
821-0004	37	870-0183	46				
821-0004	41	870-0212	33				
821-0005	41	870-0212	37				
821-0008	33	870-0212	39				
821-0008	41	870-0212	41				
821-0010	39	870-0250	39				
821-0010	41	870-0261	33				
821-0012	43	870-0284	39				
821-0014	41	870-0398	41				
821-0014	43	871-0010	43				
822-3041	20	871-0016	41				
850-0020	20						
850-0030	11						
850-0040	11						
850-0040	39						
850-0050	39						
850-2005	25						
850-2005	28						
850-2006	11						
850-2006	30						
850-2006	33						
850-2006	37						
850-2006	39						
850-2008	25						
850-2008	30						
850-2010	39						
850-2012	31						
853-0003	41						
853-0008	39						
853-0013	39						
853-0013	41						
853-2012	31						
856-0006	39						
856-0008	43						
856-0010	39						
856-0013	33						
856-1008	31						
856-1008	41						
860-2008	25						
860-2008	31						
862-0001	39						

Onan

Onan Corporation
1400 73rd Avenue N.E.
Minneapolis, Minnesota 55432

Telephone: (612) 574-5000
Telex: 275477
Cable ONAN